TABLE OF CONTENTS

SHEET NO.	SHEET DESCRIPTION
1	NOTES
2	KEY CONFIGURATIONS
3	BLADE SEALED ASSEMBLY
4	SYSTEM PACKAGING
5	BOM

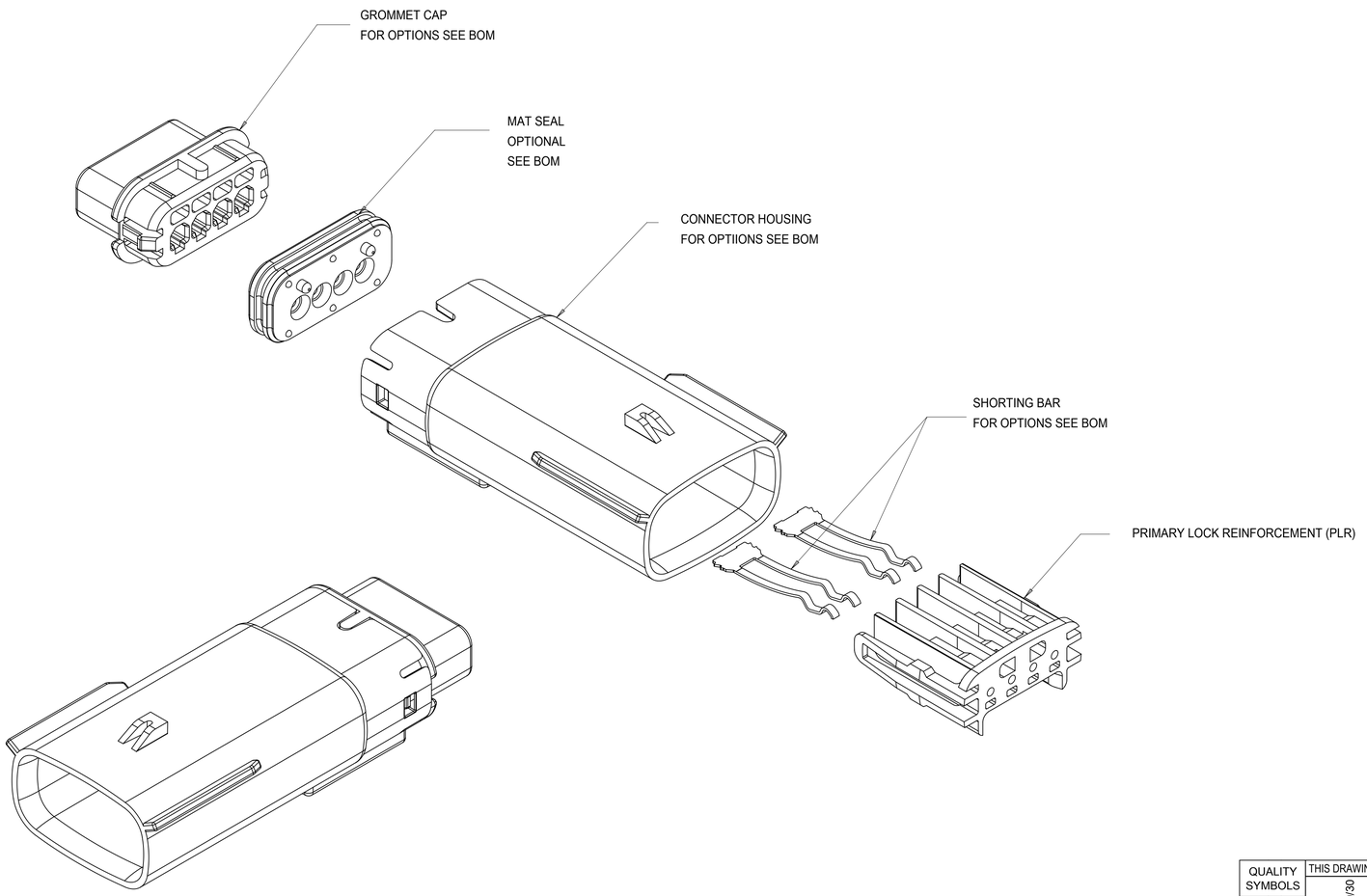

NOTES: VALID UNLESS OTHERWISE SPECIFIED

1. GENERAL:
a. APPLICATION SPECIFICATION SEE: AS-33472-100
CONTAINS: PRODUCT INTRODUCTION, PRODUCT SUMMARY, CONNECTOR ASSEMBLY, PACKAGING INFORMATION, CONNECTOR MATING, SERVICE INSTRUCTIONS, ELECTRICAL CONTINUITY CHECKING, CRIMPING, AND TROUBLESHOOTING.
-DESIGNED TO MATE WITH RECEPTACLE SEALED ASSEMBLY SPECIFIED IN MOLEX DRAWING SD-33471-041. RECEPTACLE SEALED ASSEMBLY CONFIGURATION MUST CONTAIN A PLR WITH SHORTING BAR LIFTER.
-FOR 1.5mm BLADE TERMINALS TO BE USED WITH THE SHORTING BAR CIRCUIT LOCATIONS SEE MOLEX DRAWING SD-31296-001.
-SHORTING BAR TERMINALS TO BE USED WITH WIRE WITHIN DIAMETER RANGE OF 1.7mm TO 2.06mm.
-FOR 1.5mm BLADE TERMINALS TO BE USED WITH THE NON-SHORTING BAR CIRCUIT LOCATIONS SEE MOLEX DRAWING SD-33000-001.
-NON-SHORTING BAR TERMINALS TO BE USED WITH WIRE WITHIN DIAMETER RANGE OF 1.2mm TO 2.69mm.
-ASSEMBLY SHIPPED WITH PLR IN PRE-LOCK POSITION
-IN THE EVENT THAT THE PLR IS FOUND IN THE SEATED (FINAL LOCK) POSITION, REFER TO MOLEX SPECIFICATION PS-34646-001, AVAILABLE AT www.molex.com <http://www.molex.com>
-ASSEMBLY CONFORMS TO SAE/USCAR-2 REV.4 WITH THE FOLLOWING EXCEPTIONS: TERMINAL INSERTION FORCE FOR WIRE DIAMETER ABOVE 2.5mm NOT EXCEEDING 2.69mm SHALL NOT EXCEED 45 NEWTONS.
b. PRODUCT SPECIFICATION SEE: PS-33471-000
CONTAINS: PRODUCT INTRODUCTION, PRODUCT SUMMARY, RATINGS (CURRENT, TEMPERATURE, SEALING, AND FLAMMABILITY), AND PRODUCT VALIDATION.
c. PACKAGING SPECIFICATION PER MOLEX DRAWING: PK-31300-635
d. PARTS MUST BE IN COMPLIANCE TO MOLEX CHEMICAL SUBSTANCES FOR PRODUCTS AND PACKAGING SPECIFICATION: ES-40000-5016
e. DATA MUST BE SUBMITTED UNDER THE MOLEX PART NUMBER TO IMDS (COMPANY ID#13255)
f. FOR INFORMATION ON 1X4 BLADE SEALED ASSEMBLY WITHOUT SHORTING BAR SEE SD-33481-041.

2. DESIGN - MATERIALS:
a. CONNECTOR HOUSING, GROMMET CAP, PLR: SPS/NYLON BLEND 20% GLASS FILLED
b. MAT SEAL: INHERENTLY LUBRICATED SILICONE
c. SHORTING BARS: STAINLESS STEEL

3. DESIGN - GEOMETRY:
a. THIS IS A 100% CAD GENERATED PART. THE CAD MATHEMATICAL DATA IS THE MASTER FOR THIS PART. FOR DIMENSIONAL OR ANY INFORMATION NOT SHOWN ON THIS DRAWING, ANALYZE THE CAD MODEL.
b. GEOMETRIC DIMENSIONS AND TOLERANCES PER ASME Y14.5M - 1994
c. EDGES AND UNDIMENSIONED DETAILS PER ISO13715
d. CORNERS SHOWN AS SHARP TO BE R 0.2 MAX.
e. LETTERING SHALL BE 0.15 MAX RAISED IN 0.25 MAX RECESS PAD. THIS INCLUDES RECYCLING CODE, CAVITY ID, VENDOR IDENTIFICATION, AND CUSTOMER MATERIAL NUMBER.
f. VISUAL DEFECTS SHALL MEET COSMETIC STANDARD PS-45499-002 (Class B)
g. LASER MARKING: TBD

REV	DESCRIPTION
K2	ADDED NEW P/N 31280-4436 TO 31280-4451
K	ADDED NEW P/N 31280-0450 31280-0451
J	ADDED NEW P/N 31280-0449
H	ADDED NEW P/N 31280-0448
G	UPDATED GROMMET CAP
F1	UPDATED DIMENSIONS TO MATCH MODEL
F	REDRAWN

QUALITY SYMBOLS
= 0
= 0
= 0
= 0
= 0
= 0
= 0
= 0
= 0

THIS DRAWING CONTAINS INFORMATION THAT IS PROPRIETARY TO MOLEX ELECTRONIC TECHNOLOGIES, LLC AND SHOULD NOT BE USED WITHOUT WRITTEN PERMISSION

EC NO: 167392 2017/10/30
DRWN: LSONG05
CHK'D: MVANSLAMBROU 2017/10/31
APPR:
REV K2

GENERAL TOLERANCES (UNLESS SPECIFIED)
ANGULAR TOL ± 1.0 °
4 PLACES ±
3 PLACES ±
2 PLACES ± 0.1
1 PLACE ± 0.3
0 PLACES ±
DRAFT WHERE APPLICABLE MUST REMAIN WITHIN DIMENSIONS

DIMENSION UNITS: mm
SCALE: 3:1
DRWN BY: KCUNNINGHAM DATE: 2012/08/28
CHK'D BY: MDICK DATE: 2013/03/22
APPR BY: VKOSHY DATE: 2012/09/04
DRAWING SIZE: D
THIRD ANGLE PROJECTION

molex®

MX150 1X4 BLADE
SEALED ASSEMBLY MAT SEAL, SHORTING BAR

PRODUCT CUSTOMER DRAWING

SERIES	MATERIAL NUMBER	CUSTOMER
31280	SEE BOM	GENERAL MARKET

DOCUMENT NUMBER	DOC TYPE	DOC PART	SHEET NUMBER
SD-31280-200	PSD	001	1 OF 5

RELEASE STATUS	P1	RELEASE DATE	31.10.2017 21:13:47

FORMAT: molex-B-sm1C
REVISION: D
DATE: 2013-03-04

KEY CONFIGURATIONS

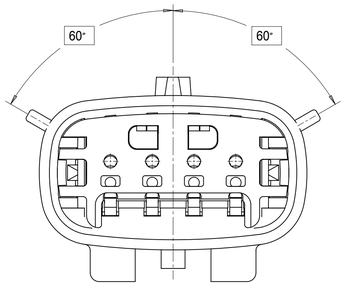

KEY A

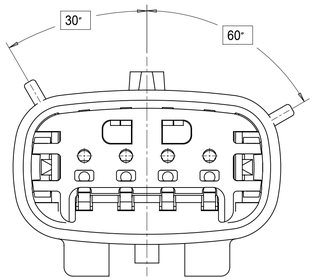

KEY B

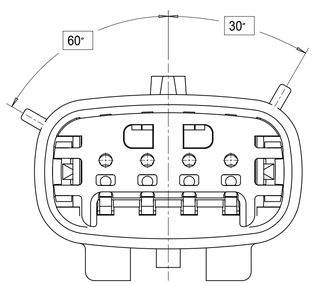

KEY C

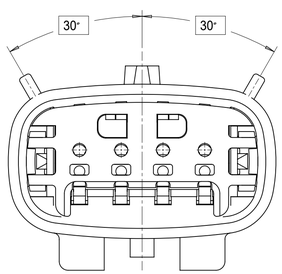

KEY D

RELEASE STATUS	P1	RELEASE DATE	31.10.2017 21:13:47

QUALITY SYMBOLS	
FA	= 0
FC	= 0
FD	= 0
	= 0
C	= 0
	= 0
	= 0
G	= 0

THIS DRAWING CONTAINS INFORMATION THAT IS PROPRIETARY TO MOLEX ELECTRONIC TECHNOLOGIES, LLC AND SHOULD NOT BE USED WITHOUT WRITTEN PERMISSION

EC NO: 167392	2017/10/30	
DRWN: LSONG05	2017/10/31	
CHK'D:		
APPR: MVANSLAMBROU		
REV K2		

GENERAL TOLERANCES (UNLESS SPECIFIED)

ANGULAR TOL ±	1.0	°
4 PLACES	±	
3 PLACES	±	
2 PLACES	±	0.1
1 PLACE	±	0.3
0 PLACES	±	

DRAFT WHERE APPLICABLE MUST REMAIN WITHIN DIMENSIONS

DIMENSION UNITS	mm
SCALE	4:1
DRWN BY	KCUNNINGHAM
DATE	2012/08/28
CHK'D BY	MDICK
DATE	2013/03/22
APPR BY	VKOSHY
DATE	2012/09/04
DRAWING SIZE	D
THIRD ANGLE PROJECTION	

molex®

MX150 1X4 BLADE
SEALED ASSEMBLY MAT SEAL, SHORTING BAR

PRODUCT CUSTOMER DRAWING

SERIES	MATERIAL NUMBER	CUSTOMER
31280	SEE BOM	GENERAL MARKET

DOCUMENT NUMBER	DOC TYPE	DOC PART	SHEET NUMBER
SD-31280-200	PSD	001	2 OF 5

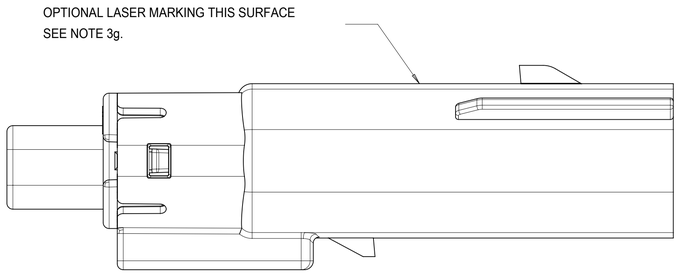

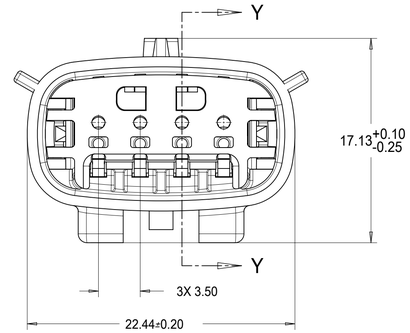

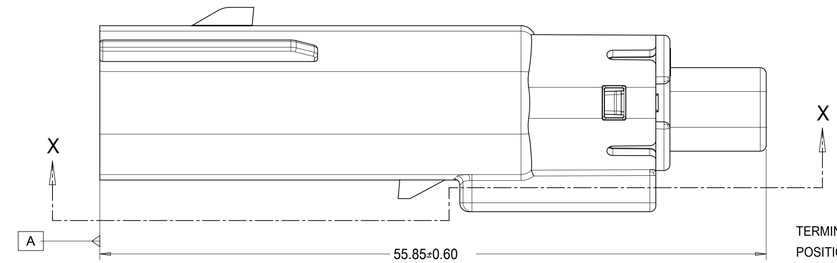

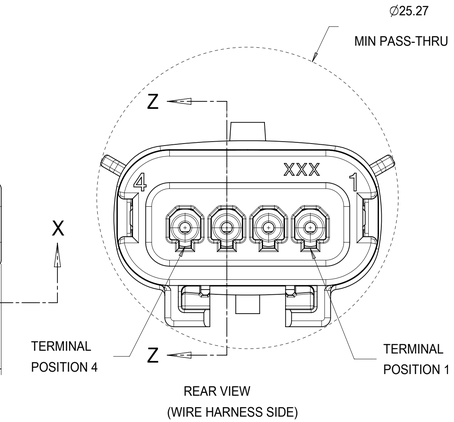

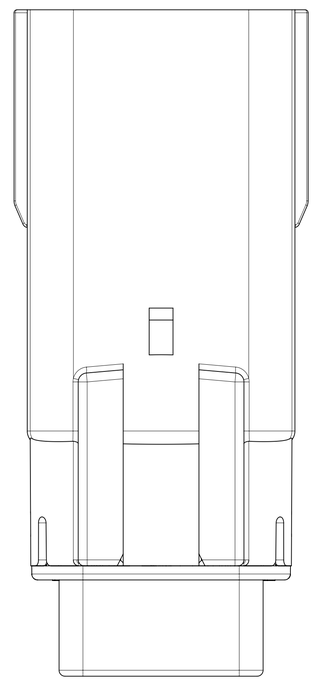

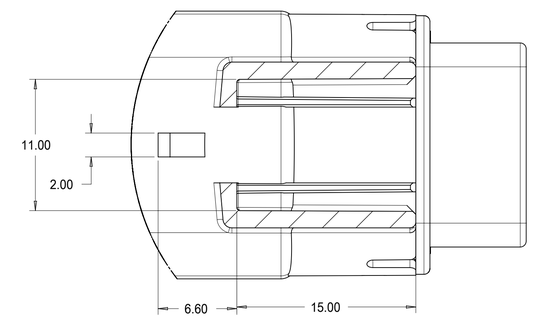

SECTIONX-X
SCALE 4:1

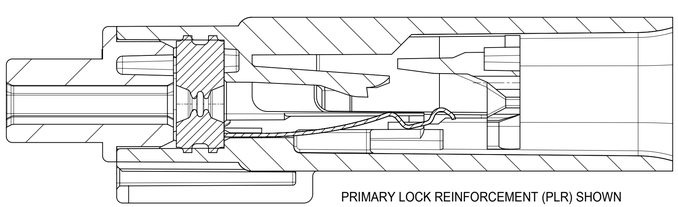

PRIMARY LOCK REINFORCEMENT (PLR) SHOWN
IN PRE-STAGED POSITION

SECTION Z-Z

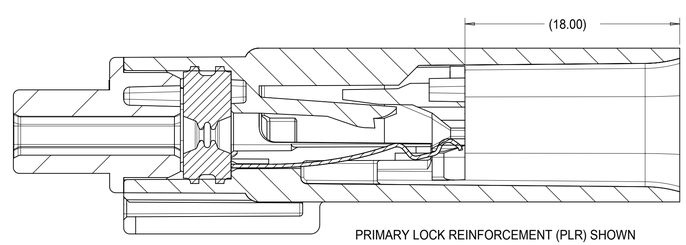

PRIMARY LOCK REINFORCEMENT (PLR) SHOWN
IN FINAL-LOCK POSITION

SECTION Y-Y

QUALITY SYMBOLS	THIS DRAWING CONTAINS INFORMATION THAT IS PROPRIETARY TO MOLEX ELECTRONIC TECHNOLOGIES, LLC AND SHOULD NOT BE USED WITHOUT WRITTEN PERMISSION					
= 0	EC NO: 167392	2017/10/30	GENERAL TOLERANCES (UNLESS SPECIFIED)	DIMENSION UNITS: mm	SCALE: 4:1	molex®
= 0	DRWN: LSONG05	2017/10/31	ANGULAR TOL ± 1.0 °	DRWN BY: KCUNNINGHAM	DATE: 2012/08/28	MX150 1X4 BLADE SEALED ASSEMBLY MAT SEAL, SHORTING BAR
= 0	CHK'D:		4 PLACES ±	CHK'D BY: MDICK	DATE: 2013/03/22	
= 0	APPR: MVANSLAMBROU		3 PLACES ±	APPR BY: VKOSHY	DATE: 2012/09/04	PRODUCT CUSTOMER DRAWING
= 0			2 PLACES ± 0.1	DRAWING SIZE: D	THIRD ANGLE PROJECTION	SERIES: 31280 / MATERIAL NUMBER: SEE BOM / CUSTOMER: GENERAL MARKET
= 0			1 PLACE ± 0.3			
= 0			0 PLACES ±			
= 0			DRAFT WHERE APPLICABLE MUST REMAIN WITHIN DIMENSIONS			DOCUMENT NUMBER: SD-31280-200 / DOC TYPE: PSD / DOC PART: 001 / SHEET NUMBER: 3 OF 5
= 0	REV: K2					

RELEASE STATUS	P1	RELEASE DATE	31.10.2017 21:13:47

PCPRINT, creator-fb-prod-0
Date: 31.10.2017
Time: 21:13:47

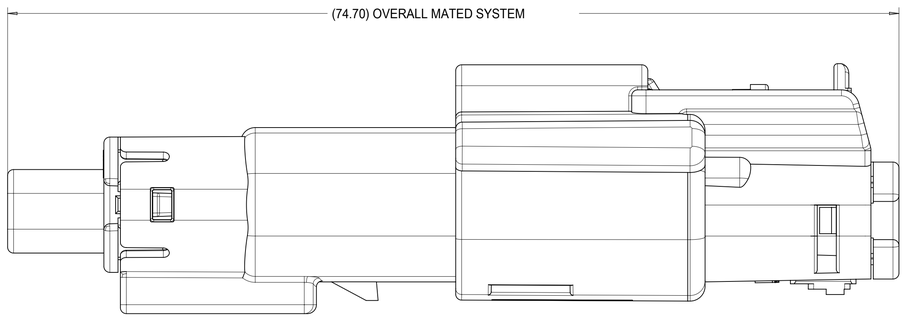

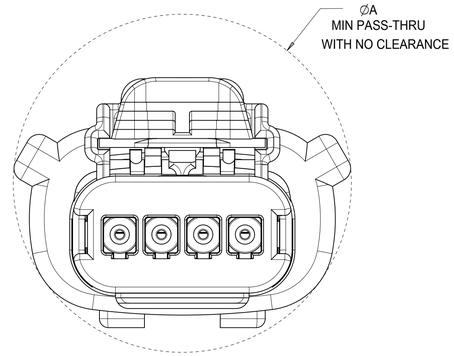

CHARTED DIMENSIONS	
CONFIGURATION	A
MX150 1X4 RECPT SEALED ASSY - STANDARD	29.14
MX150 1X4 RECPT SEALED ASSY - ERGO	29.33
MX150 1X4 RECPT SEALED ASSY - SHORTING (SHRT) BAR	29.14

QUALITY SYMBOLS
= 0
= 0
= 0
= 0
= 0
= 0
= 0
= 0

THIS DRAWING CONTAINS INFORMATION THAT IS PROPRIETARY TO MOLEX ELECTRONIC TECHNOLOGIES, LLC AND SHOULD NOT BE USED WITHOUT WRITTEN PERMISSION

EC NO: 167392 2017/10/30
DRWN: LSONG05
CHK'D: 2017/10/31
APPR: MVANSLAMBROU
REV K2

GENERAL TOLERANCES (UNLESS SPECIFIED)
ANGULAR TOL ± 1.0 °
4 PLACES ±
3 PLACES ±
2 PLACES ± 0.1
1 PLACE ± 0.3
0 PLACES ±
DRAFT WHERE APPLICABLE MUST REMAIN WITHIN DIMENSIONS

DIMENSION UNITS: mm
SCALE: 4:1
DRWN BY: KCUNNINGHAM DATE: 2012/08/28
CHK'D BY: MDICK DATE: 2013/03/22
APPR BY: VKOSHY DATE: 2012/09/04
DRAWING SIZE: D
THIRD ANGLE PROJECTION

molex®

MX150 1X4 BLADE
SEALED ASSEMBLY MAT SEAL, SHORTING BAR

PRODUCT CUSTOMER DRAWING

SERIES	MATERIAL NUMBER	CUSTOMER
31280	SEE BOM	GENERAL MARKET

DOCUMENT NUMBER	DOC TYPE	DOC PART	SHEET NUMBER
SD-31280-200	PSD	001	4 OF 5

RELEASE STATUS	P1	RELEASE DATE	31.10.2017 21:13:47

TEMPLATE: molex-Sub-001
DOCTYPE: TP
DATE: 2017/05/08

BOM SHEET 1

MOLEX ASSEMBLY PART NUMBER	HOUSING COLOR	KEYING OPTION	CAVITY NUMBER "X" INDICATES PLUGGED POSITION				NUMBER OF PLUGGED POSITIONS	MAT SEAL	SHORTING BAR CIRCUITS 1&2	SHORTING BAR CIRCUITS 3&4
			1	2	3	4				
31280-0436	BLACK	A					0	PRESENT	PRESENT	PRESENT
31280-0437	LIGHT GRAY	B					0	PRESENT	PRESENT	PRESENT
31280-0438	BROWN	C					0	PRESENT	PRESENT	PRESENT
31280-0439	GREEN	D					0	PRESENT	PRESENT	PRESENT
31280-0440	CUSTOM	TBD					0	PRESENT	PRESENT	PRESENT
31280-0441	BLACK	A			X	X	2	PRESENT	PRESENT	NONE
31280-0442	BLACK	A					0	NONE	PRESENT	PRESENT
31280-0443	LIGHT GRAY	B					0	NONE	PRESENT	PRESENT
31280-0444	BROWN	C					0	NONE	PRESENT	PRESENT
31280-0445	GREEN	D					0	NONE	PRESENT	PRESENT
31280-0446	BLACK	A					0	PRESENT	PRESENT	NONE
31280-0447	LIGHT GRAY	B					0	PRESENT	NONE	PRESENT
31280-0448	YELLOW	A					0	PRESENT	PRESENT	PRESENT
31280-0449	YELLOW	A				X	1	PRESENT	PRESENT	NONE
31280-0450	DARK GRAY	C					0	PRESENT	PRESENT	PRESENT
31280-0451	STONE GRAY	D					0	PRESENT	PRESENT	PRESENT

K2

MOLEX ASSEMBLY PART NUMBER	HOUSING COLOR	KEYING OPTION	CAVITY NUMBER "X" INDICATES PLUGGED POSITION				NUMBER OF PLUGGED POSITIONS	MAT SEAL	SHORTING BAR CIRCUITS 1&2	SHORTING BAR CIRCUITS 3&4
			1	2	3	4				
31280-4436	BLACK	A					0	PRESENT	PRESENT	PRESENT
31280-4437	LIGHT GRAY	B					0	PRESENT	PRESENT	PRESENT
31280-4438	BROWN	C					0	PRESENT	PRESENT	PRESENT
31280-4439	GREEN	D					0	PRESENT	PRESENT	PRESENT
31280-4440	CUSTOM	TBD					0	PRESENT	PRESENT	PRESENT
31280-4441	BLACK	A			X	X	2	PRESENT	PRESENT	NONE
31280-4442	BLACK	A					0	NONE	PRESENT	PRESENT
31280-4443	LIGHT GRAY	B					0	NONE	PRESENT	PRESENT
31280-4444	BROWN	C					0	NONE	PRESENT	PRESENT
31280-4445	GREEN	D					0	NONE	PRESENT	PRESENT
31280-4446	BLACK	A					0	PRESENT	PRESENT	NONE
31280-4447	LIGHT GRAY	B					0	PRESENT	NONE	PRESENT
31280-4448	YELLOW	A					0	PRESENT	PRESENT	PRESENT
31280-4449	YELLOW	A				X	1	PRESENT	PRESENT	NONE
31280-4450	DARK GRAY	C					0	PRESENT	PRESENT	PRESENT
31280-4451	STONE GRAY	D					0	PRESENT	PRESENT	PRESENT

QUALITY SYMBOLS
= 0
= 0
= 0
= 0
= 0
= 0
= 0
= 0

THIS DRAWING CONTAINS INFORMATION THAT IS PROPRIETARY TO MOLEX ELECTRONIC TECHNOLOGIES, LLC AND SHOULD NOT BE USED WITHOUT WRITTEN PERMISSION

EC NO: 167392
DRWN: LSONG05 2017/10/30
CHK'D: MVANS 2017/10/31
APPR: LAMBROU
REV K2

GENERAL TOLERANCES (UNLESS SPECIFIED)
ANGULAR TOL ± 1.0 °
4 PLACES ±
3 PLACES ±
2 PLACES ± 0.1
1 PLACE ± 0.3
0 PLACES ±
DRAFT WHERE APPLICABLE MUST REMAIN WITHIN DIMENSIONS

DIMENSION UNITS: mm
SCALE: 1:1
DRWN BY: KCUNNINGHAM DATE: 2012/08/28
CHK'D BY: MDICK DATE: 2013/03/22
APPR BY: VKOSHY DATE: 2012/09/04
DRAWING SIZE: D
THIRD ANGLE PROJECTION

molex®

MX150 1X4 BLADE
SEALED ASSEMBLY MAT SEAL, SHORTING BAR

PRODUCT CUSTOMER DRAWING

SERIES	MATERIAL NUMBER	CUSTOMER
31280	SEE BOM	GENERAL MARKET

DOCUMENT NUMBER	DOC TYPE	DOC PART	SHEET NUMBER
SD-31280-200	PSD	001	5 OF 5

RELEASE STATUS	P1	RELEASE DATE	31.10.2017 21:13:47

TEMPLATE, molex-Size-D-C
DOCUMENT: 31
DATE: 2017-05-08

TABLE OF CONTENTS

SHEET NO.	SHEET DESCRIPTION
1	NOTES AND BOM
2	CONFIGURATIONS
3-4	KEY CONFIGURATIONS
5	RECEPTACLE CONNECTOR ASSEMBLY
6	BACKSHELL NOTES
7	BACKSHELL
8	BACKSHELL CONFIGURATIONS

NOTES: VALID UNLESS OTHERWISE SPECIFIED

1. GENERAL:
a. APPLICATION SPECIFICATION SEE: AS-33472-100
-CONTAINS: PRODUCT INTRODUCTION, PRODUCT SUMMARY, CONNECTOR ASSEMBLY, PACKAGING INFORMATION, CONNECTOR MATING, SERVICE INSTRUCTIONS, ELECTRICAL CONTINUITY CHECKING, CRIMPING, AND TROUBLESHOOTING.
-DESIGNED TO MATE WITH DEVICE OR CONNECTOR AS SPECIFIED IN THE MATING INTERFACE/CONNECTOR DRAWINGS CHART.
*DENOTES DRAWINGS THAT CAN BE ACCESSED AT <http://ewcap.uscarteams.org/>.
-ASSEMBLY SHIPPED WITH PLR IN PRE-LOCK POSITION (SEE PLR PRE-LOCK VIEW SHEET 5).
b. PRODUCT SPECIFICATION SEE:
-STANDARD CONFIGURATION: PS-33471-000
-UL V0 CONFIGURATION: PS-160105-0001
CONTAINS: PRODUCT INTRODUCTION, PRODUCT SUMMARY, RATINGS (CURRENT, TEMPERATURE, SEALING, AND FLAMMABILITY), TERMINALS, WIRE DIAMETER RANGE, PRODUCT VALIDATION, AND PRODUCT DEVIATIONS.
c. PACKAGING SPECIFICATION PER MOLEX DRAWING: SEE PACKAGING CHART
d. PARTS MUST BE IN COMPLIANCE TO MOLEX CHEMICAL SUBSTANCES FOR PRODUCTS AND PACKAGING SPECIFICATION: QEHS-699000-301
e. DATA MUST BE SUBMITTED UNDER THE MOLEX PART NUMBER TO IMDS (COMPANY ID#13255)

2. DESIGN - MATERIALS:
a. FOR BILL OF MATERIALS SEE:
-STANDARD CONFIGURATION SD-33471-0002
-UL V0 CONFIGURATION SD-160105-0002

3. DESIGN - GEOMETRY:
a. THE 3-D CAD DATA IS BASIC (WITHOUT TOLERANCE) AND MASTER FOR THIS PART WITH THE EXCEPTION OF UNDERLINED DIMENSIONS. DIMENSIONAL INFORMATION NOT SHOWN ON THIS DRAWING IS DEFINED BY THE DATA FILE AT ITS LATEST REVISION.
b. GEOMETRIC DIMENSIONS AND TOLERANCES PER ASME Y14.5M-2009
c. EDGES AND UNDIMENSIONED DETAILS PER ISO13715
d. CORNERS SHOWN AS SHARP TO BE R 0.2 MAX.
e. LETTERING SHALL BE 0.15 MAX RAISED IN 0.25 MAX RECESS PAD. THIS INCLUDES RECYCLING CODE, CAVITY ID, VENDOR IDENTIFICATION, AND CUSTOMER MATERIAL NUMBER.
f. VISUAL DEFECTS SHALL MEET COSMETIC STANDARD PS-45499-002 (Class B).
g. LASER MARKING:
1. PART NUMBER
2. DAY OF THE YEAR
3. SHIFT
4. YEAR
FOR ADDITIONAL INFORMATION SEE SECTION 5 UNDER PROCEDURES IN ES-34735-008.

PACKAGING

DESCRIPTION	DRAWING NO.
1X2	PK-31300-635
1X6	PK-31300-903

MATING INTERFACE/CONNECTOR DRAWINGS

DESCRIPTION	INTERFACE DEFINITION	MOLEX INLINE
1X2	*150-S-002-1-Z05	SD-33481-0001
1X6	*150-S-006-1-Z03	SD-33481-0001

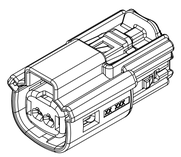

1x2

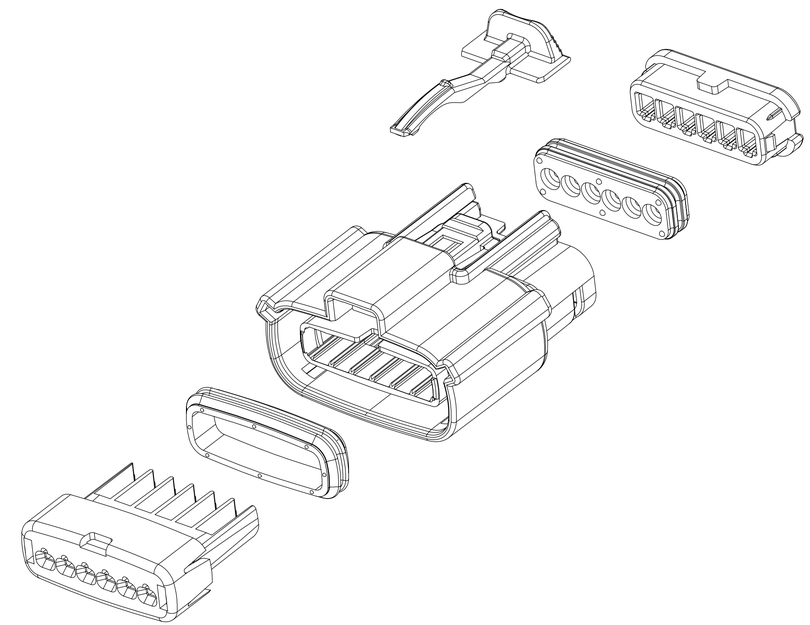

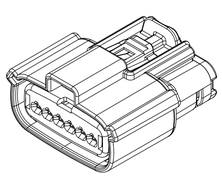

1x6

INSPECTION NUMBER LOG
LAST NUMBER: 11
ADDED: 11
REMOVED:

REV	REV DESCRIPTION
A1	UPDATED THE DRAWING FRAME
A	MINOR GEOMETRY CHANGE FOR UL V0
2	UPDATE VIEWSETS
1	INITIAL RELEASE

THIS DRAWING CONTAINS INFORMATION THAT IS PROPRIETARY TO MOLEX ELECTRONIC TECHNOLOGIES, LLC AND SHOULD NOT BE USED WITHOUT WRITTEN PERMISSION

FUNCTIONAL SYMBOLS: FA = 0, FC = 0, FD = 0
DIVISIONAL SYMBOLS

DIMENSION UNITS	SCALE
mm	1.5:1

GENERAL TOLERANCES (UNLESS SPECIFIED)

ANGULAR TOL	±	1.0 °
4 PLACES	±	
3 PLACES	±	
2 PLACES	±	0.1
1 PLACE	±	0.2
0 PLACES	±	

DRAFT WHERE APPLICABLE MUST REMAIN WITHIN DIMENSIONS

CURRENT REV DESC:

EC NO: 643941
DRWN: XLDONG03 2020/08/21
CHK'D: JDENG02 2020/08/26
APPR: JDENG02 2020/08/26

INITIAL REVISION:
DRWN: APROFFITT 2015/11/04
APPR: KDEKOSHI 2016/06/14

THIRD ANGLE PROJECTION | DRAWING: D-SIZE | SERIES: 33471

molex

MX150 RCPT
SINGLE ROW SEALED ASSY MAT SEAL

PRODUCT CUSTOMER DRAWING

DOCUMENT NUMBER	DOC TYPE	DOC PART	REVISION
SD-33471-0001	PSD	001	A1

MATERIAL NUMBER	CUSTOMER	SHEET NUMBER
SEE NOTE 2a	GENERAL MARKET	1 OF 8

DOCUMENT STATUS	P1	RELEASE DATE	2020/08/26 07:23:52

NUMBER: 33471-0001-001
REVISION: A1
DATE: 2020/08/26

SHEET DESCRIPTION

CONFIGURATIONS

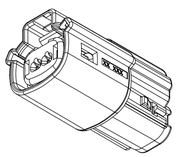

1x2 - STD

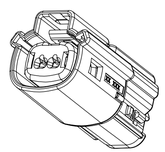

1x2 - UL V0*

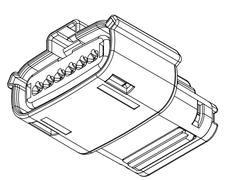

1x6 - STD

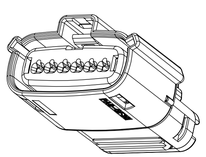

1x6 - UL V0*

*MINOR GEOMETRY DIFFERENCE THAN STANDARD CONFIGUATION
SEE NOTES 1 & 2 FOR MORE INFORMATION

DOCUMENT STATUS	P1	RELEASE DATE	2020/08/26 07:23:52

FUNCTIONAL SYMBOLS: FA = 0, FC = 0, FD = 0

DIVISIONAL SYMBOLS

THIS DRAWING CONTAINS INFORMATION THAT IS PROPRIETARY TO MOLEX ELECTRONIC TECHNOLOGIES, LLC AND SHOULD NOT BE USED WITHOUT WRITTEN PERMISSION

DIMENSION UNITS	SCALE
mm	1.5:1

GENERAL TOLERANCES (UNLESS SPECIFIED)

ANGULAR TOL	±	1.0 °
4 PLACES	±	
3 PLACES	±	
2 PLACES	±	0.1
1 PLACE	±	0.2
0 PLACES	±	

DRAFT WHERE APPLICABLE MUST REMAIN WITHIN DIMENSIONS

CURRENT REV DESC:

EC NO: 643941
DRWN: XLDONG03 2020/08/21
CHK'D: JDENG02 2020/08/26
APPR: JDENG02 2020/08/26

INITIAL REVISION:
DRWN: APROFFITT 2015/11/04
APPR: KDEKOSKI 2016/06/14

molex

MX150 RCPT
SINGLE ROW SEALED ASSY MAT SEAL

PRODUCT CUSTOMER DRAWING

DOCUMENT NUMBER	DOC TYPE	DOC PART	REVISION
SD-33471-0001	PSD	001	A1

THIRD ANGLE PROJECTION	DRAWING	SERIES	MATERIAL NUMBER	CUSTOMER	SHEET NUMBER
	D-SIZE	33471	SEE NOTE 2a	GENERAL MARKET	2 OF 8

SHEET DESCRIPTION

KEY CONFIGURATIONS

1X2

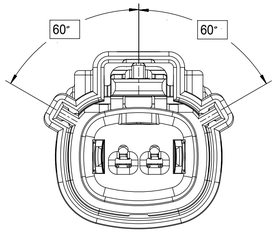

KEY A

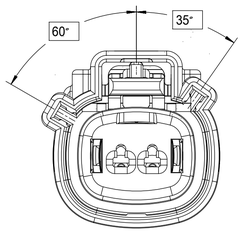

KEY B

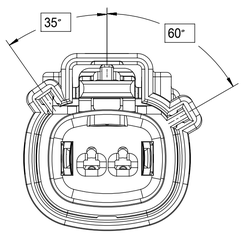

KEY C

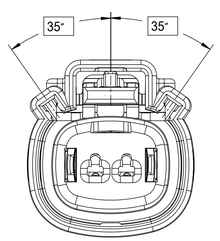

KEY D

DOCUMENT STATUS	P1	RELEASE DATE	2020/08/26 07:23:52

FUNCTIONAL SYMBOLS

FA = 0

FC = 0

FP = 0

DIVISIONAL SYMBOLS

THIS DRAWING CONTAINS INFORMATION THAT IS PROPRIETARY TO MOLEX ELECTRONIC TECHNOLOGIES, LLC AND SHOULD NOT BE USED WITHOUT WRITTEN PERMISSION

DIMENSION UNITS	SCALE
mm	3:1

GENERAL TOLERANCES (UNLESS SPECIFIED)

ANGULAR TOL	±	1.0 °
4 PLACES	±	
3 PLACES	±	
2 PLACES	±	0.1
1 PLACE	±	0.2
0 PLACES	±	

DRAFT WHERE APPLICABLE MUST REMAIN WITHIN DIMENSIONS

CURRENT REV DESC:

EC NO: 643941

DRWN:	XLDONG03	2020/08/21
CHK'D:	JDENG02	2020/08/26
APPR:	JDENG02	2020/08/26

INITIAL REVISION:

DRWN:	APROFFITT	2015/11/04
APPR:	KDEKOSKI	2016/06/14

THIRD ANGLE PROJECTION

DRAWING: D-SIZE

SERIES: 33471

molex

MX150 RCPT
SINGLE ROW SEALED ASSY MAT SEAL

PRODUCT CUSTOMER DRAWING

DOCUMENT NUMBER	DOC TYPE	DOC PART	REVISION
SD-33471-0001	PSD	001	A1

MATERIAL NUMBER	CUSTOMER	SHEET NUMBER
SEE NOTE 2a	GENERAL MARKET	3 OF 8

SHEET DESCRIPTION

KEY CONFIGURATIONS CONT.

1X6

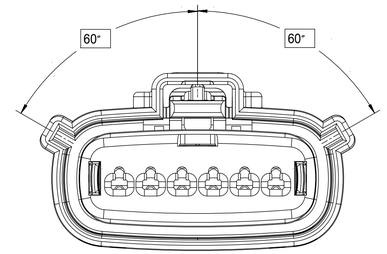

KEY A

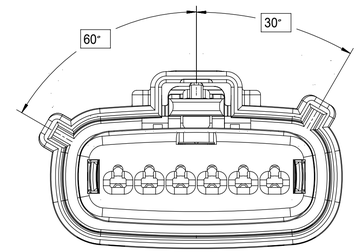

KEY B

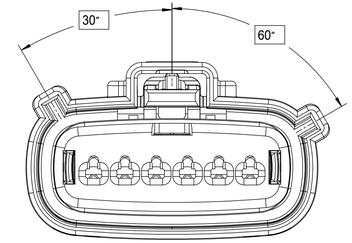

KEY C

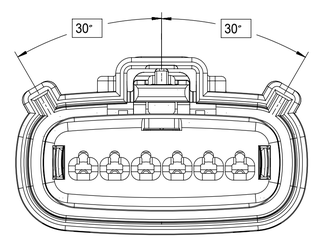

KEY D

FUNCTIONAL SYMBOLS	
FA	= 0
FC	= 0
FP	= 0
DIVISIONAL SYMBOLS	

THIS DRAWING CONTAINS INFORMATION THAT IS PROPRIETARY TO MOLEX ELECTRONIC TECHNOLOGIES, LLC AND SHOULD NOT BE USED WITHOUT WRITTEN PERMISSION

DIMENSION UNITS	SCALE
mm	3:1

GENERAL TOLERANCES (UNLESS SPECIFIED)		
ANGULAR TOL	±	1.0 °
4 PLACES	±	
3 PLACES	±	
2 PLACES	±	0.1
1 PLACE	±	0.2
0 PLACES	±	

DRAFT WHERE APPLICABLE MUST REMAIN WITHIN DIMENSIONS

CURRENT REV DESC:

EC NO: 643941
DRWN: XLDONG03 2020/08/21
CHK'D: JDENG02 2020/08/26
APPR: JDENG02 2020/08/26

INITIAL REVISION:
DRWN: APROFFITT 2015/11/04
APPR: KDEKOSKI 2016/06/14

molex

MX150 RCPT
SINGLE ROW SEALED ASSY MAT SEAL

PRODUCT CUSTOMER DRAWING

DOCUMENT NUMBER	DOC TYPE	DOC PART	REVISION
SD-33471-0001	PSD	001	A1

THIRD ANGLE PROJECTION	DRAWING	SERIES	MATERIAL NUMBER	CUSTOMER	SHEET NUMBER
	D-SIZE	33471	SEE NOTE 2a	GENERAL MARKET	4 OF 8

DOCUMENT STATUS	P1	RELEASE DATE	2020/08/26 07:23:52

FORMAT: model-SI-prod-D
REVISION: J
DATE: 2020/01/14

SHEET DESCRIPTION

RECEPTACLE CONNECTOR ASSEMBLY - STD

CHARTED DIMENSIONS

DESCRIPTION	DIMENSIONS					
	A	B	C	D	E	F
1X2	19.40	1.75	21.73	20.55	37.65	19.64
1X6	32.75	1.75	35.21	19.90	37.65	N/A
1X6 UL V0	N/A	1.75	35.23	19.90	37.65	33.64

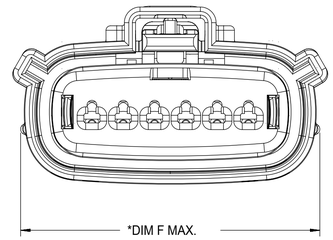

*APPLIE TO UL V0 CONFIGURATIONS ONLY

(11)

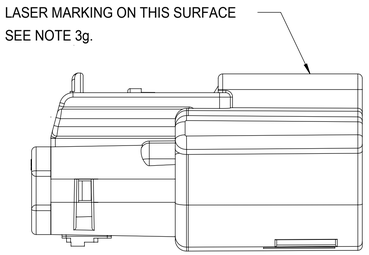

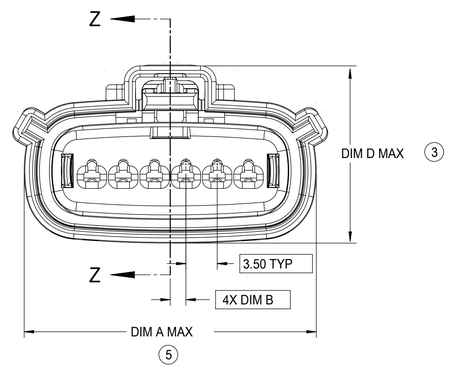

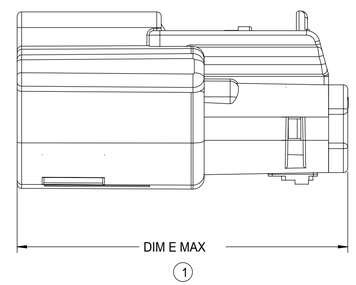

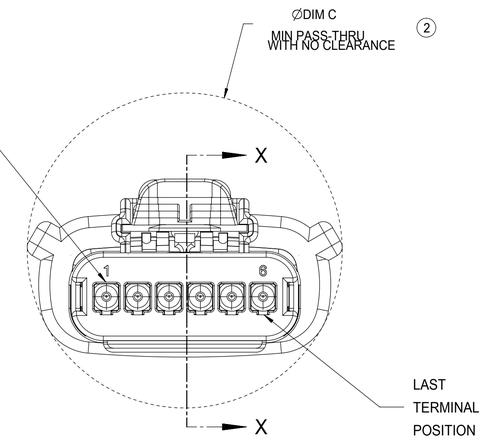

REAR VIEW
(WIRE HARNESS SIDE)

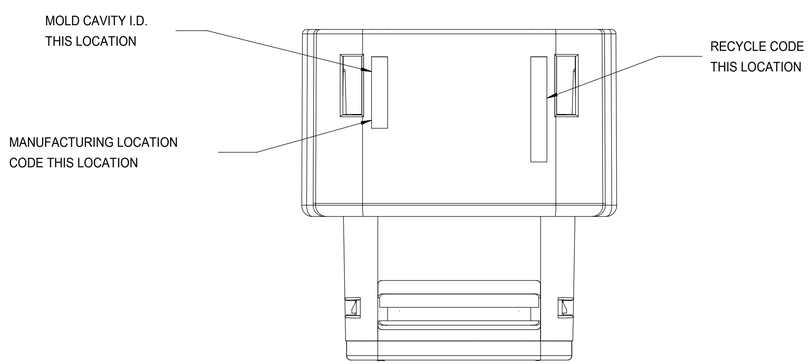

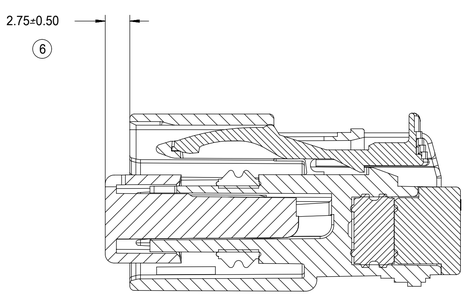

PRIMARY LOCK REINFORCEMENT (PLR) SHOWN
IN PRE-STAGED POSITION

SECTION Z-Z

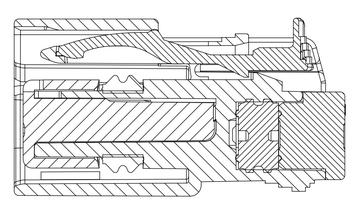

PRIMARY LOCK REINFORCEMENT (PLR) SHOWN
IN FINAL-LOCK POSITION

SECTION X-X

DOCUMENT STATUS	P1	RELEASE DATE	2020/08/26 07:23:52

THIS DRAWING CONTAINS INFORMATION THAT IS PROPRIETARY TO MOLEX ELECTRONIC TECHNOLOGIES, LLC AND SHOULD NOT BE USED WITHOUT WRITTEN PERMISSION

FUNCTIONAL SYMBOLS: FA = 0, FC = 0, FE = 0

DIVISIONAL SYMBOLS

DIMENSION UNITS	SCALE
mm	3:1

GENERAL TOLERANCES (UNLESS SPECIFIED)

ANGULAR TOL	±	1.0 °
4 PLACES	±	
3 PLACES	±	
2 PLACES	±	0.1
1 PLACE	±	0.2
0 PLACES	±	

DRAFT WHERE APPLICABLE MUST REMAIN WITHIN DIMENSIONS

CURRENT REV DESC:

EC NO: 643941
DRWN: XLDONG03 2020/08/21
CHK'D: JDENG02 2020/08/26
APPR: JDENG02 2020/08/26

INITIAL REVISION:
DRWN: APROFFITT 2015/11/04
APPR: KDEKOSKI 2016/06/14

THIRD ANGLE PROJECTION | DRAWING: D-SIZE | SERIES: 33471

molex

MX150 RCPT
SINGLE ROW SEALED ASSY MAT SEAL

PRODUCT CUSTOMER DRAWING

DOCUMENT NUMBER	DOC TYPE	DOC PART	REVISION
SD-33471-0001	PSD	001	A1

MATERIAL NUMBER	CUSTOMER	SHEET NUMBER
SEE NOTE 2a	GENERAL MARKET	5 OF 8

SHEET DESCRIPTION

BACKSHELL NOTES

BACKSHELL NOTES: VALID UNLESS OTHERWISE SPECIFIED

1. GENERAL:

a. APPLICATION SPECIFICATION SEE: AS-34951-001

-DESIGNED TO MATE WITH RECEPTACLE SEALED ASSEMBLY
SPECIFIED IN MOLEX DRAWING SD-33471-0001.
-SYSTEM TO BE USED WITH WIRE WITHIN DIAMETER RANGE OF 1.2mm TO 2.69mm.
-COMPONENTS ARE OPTIONAL AND MUST BE PURCHASED SEPERATELY.
-BACKSHELL DESIGN IS OWNED BY SCHLEMMER.
-FOR ADDITIONAL INFORMATION SEE THE BACKSHELL COMPONENT DRAWING SD-34949-0001.

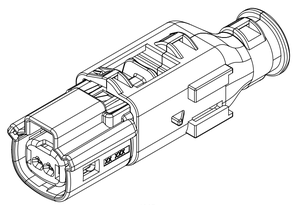

1X2

BACKSHELL CUSTOMER
MODEL NUMBER LEGEND

34949-XXXX

CUSTOMER MODEL COMPONENTS
- 0 - BACKSHELL ONLY
- 1 - BACKSHELL & MX150 HOUSING KEY A ASSEMBLY
- 2 - BACKSHELL & MX150 HOUSING KEY B ASSEMBLY
- 3 - BACKSHELL & MX150 HOUSING KEY C ASSEMBLY
- 4 - BACKSHELL & MX150 HOUSING KEY D ASSEMBLY

BACKSHELL FEATURES
- 1 - WITH RIBS
- 2 - WITHOUT RIBS

MX150 CIRCUIT SIZE 02, 03, 04, 05, 06

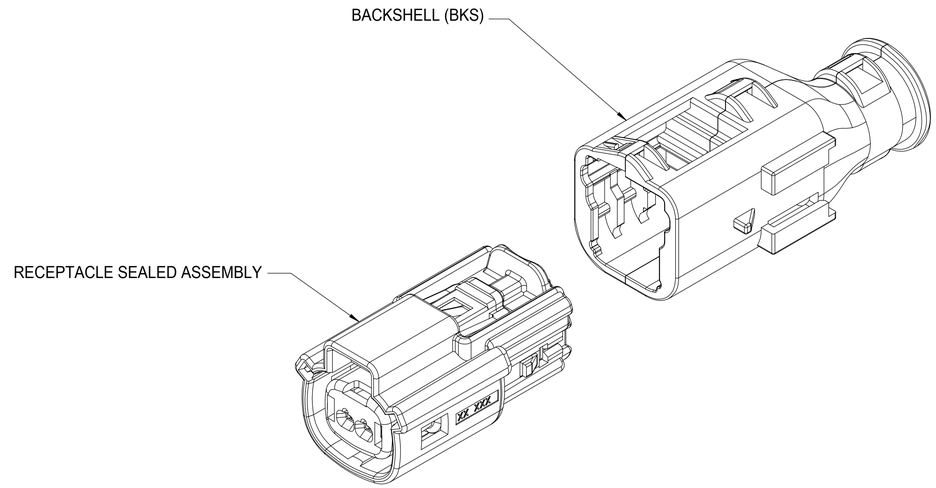

THIS DRAWING CONTAINS INFORMATION THAT IS PROPRIETARY TO MOLEX ELECTRONIC TECHNOLOGIES, LLC AND SHOULD NOT BE USED WITHOUT WRITTEN PERMISSION

FUNCTIONAL SYMBOLS
FA = 0
FC = 0
FP = 0
DIVISIONAL SYMBOLS

DIMENSION UNITS	SCALE
mm	4:1

GENERAL TOLERANCES (UNLESS SPECIFIED)

ANGULAR TOL	±	1.0 °
4 PLACES	±	
3 PLACES	±	
2 PLACES	±	0.1
1 PLACE	±	0.2
0 PLACES	±	

DRAFT WHERE APPLICABLE MUST REMAIN WITHIN DIMENSIONS

CURRENT REV DESC:

EC NO: 643941
DRWN: XLDONG03 2020/08/21
CHK'D: JDENG02 2020/08/26
APPR: JDENG02 2020/08/26

INITIAL REVISION:
DRWN: APROFFITT 2015/11/04
APPR: KDEKOSKI 2016/06/14

molex

MX150 RCPT
SINGLE ROW SEALED ASSY MAT SEAL

PRODUCT CUSTOMER DRAWING

DOCUMENT NUMBER	DOC TYPE	DOC PART	REVISION
SD-33471-0001	PSD	001	A1

THIRD ANGLE PROJECTION	DRAWING	SERIES	MATERIAL NUMBER	CUSTOMER	SHEET NUMBER
	D-SIZE	33471	SEE NOTE 2a	GENERAL MARKET	6 OF 8

DOCUMENT STATUS	P1	RELEASE DATE	2020/08/26 07:23:52

FORMAT: 2_master-tb-prod-01
REVISION: J
DATE: 2020/01/14

SHEET DESCRIPTION

BACKSHELL

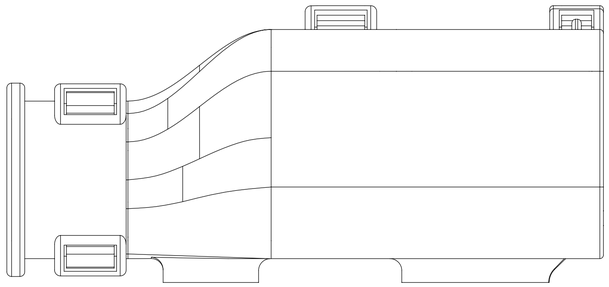

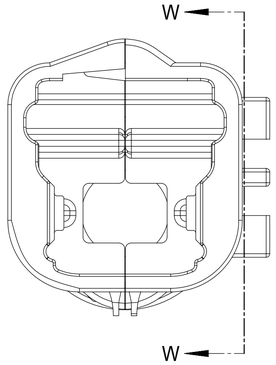

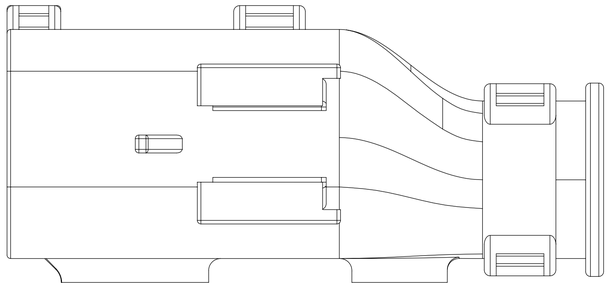

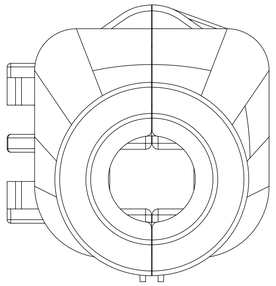

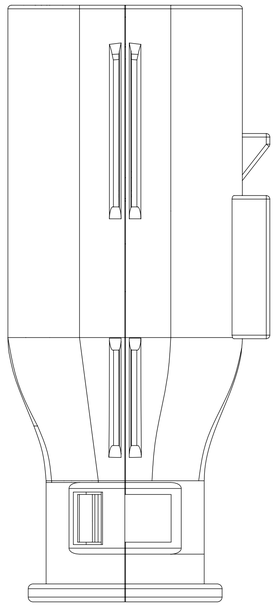

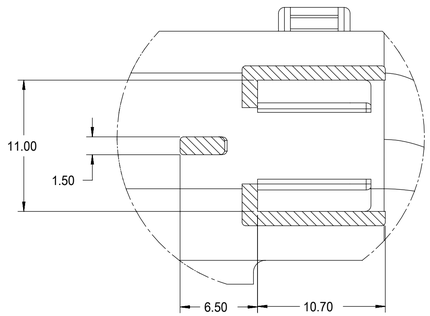

Partial W-W
SCALE 4:1

FUNCTIONAL SYMBOLS			
FA = 0	DIMENSION UNITS: mm	SCALE: 4:1	
FC = 0	GENERAL TOLERANCES (UNLESS SPECIFIED)		
FP = 0	ANGULAR TOL	±	1.0 °
	4 PLACES	±	
DIVISIONAL SYMBOLS	3 PLACES	±	
	2 PLACES	±	0.1
	1 PLACE	±	0.2
	0 PLACES	±	
	DRAFT WHERE APPLICABLE MUST REMAIN WITHIN DIMENSIONS		

THIS DRAWING CONTAINS INFORMATION THAT IS PROPRIETARY TO MOLEX ELECTRONIC TECHNOLOGIES, LLC AND SHOULD NOT BE USED WITHOUT WRITTEN PERMISSION

CURRENT REV DESC:

EC NO: 643941
DRWN: XLDONG03 2020/08/21
CHK'D: JDENG02 2020/08/26
APPR: JDENG02 2020/08/26

INITIAL REVISION:
DRWN: APROFFITT 2015/11/04
APPR: KDEKOSKI 2016/06/14

molex

MX150 RCPT
SINGLE ROW SEALED ASSY MAT SEAL

PRODUCT CUSTOMER DRAWING

DOCUMENT NUMBER	DOC TYPE	DOC PART	REVISION
SD-33471-0001	PSD	001	A1

THIRD ANGLE PROJECTION	DRAWING	SERIES	MATERIAL NUMBER	CUSTOMER	SHEET NUMBER
	D-SIZE	33471	SEE NOTE 2a	GENERAL MARKET	7 OF 8

DOCUMENT STATUS	P1	RELEASE DATE	2020/08/26 07:23:52

FORMAT: master-b-prod-D
TEMPLATE:
DATE: 2020-01-14

SHEET DESCRIPTION

BACKSHELL CONFIGURATIONS

CHARTED DIMENSIONS	
DESCRIPTION	DIMENSIONS
	G
1X2	26.00

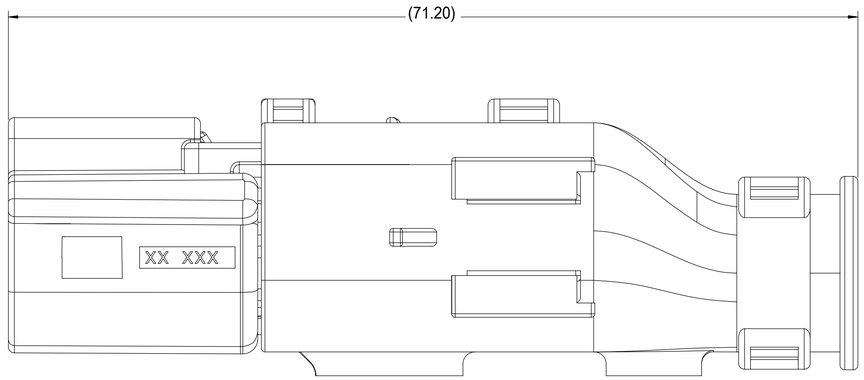

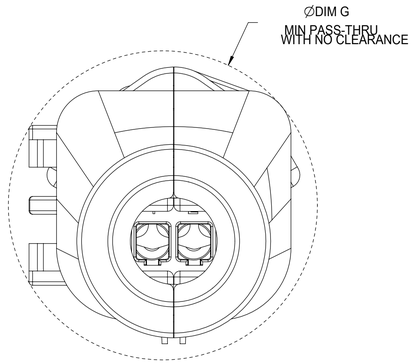

RECEPTACLE SEALED ASSEMBLY WITH RECEPTACLE BACKSHELL

FUNCTIONAL SYMBOLS	
FA	= 0
FC	= 0
FP	= 0
DIVISIONAL SYMBOLS	

THIS DRAWING CONTAINS INFORMATION THAT IS PROPRIETARY TO MOLEX ELECTRONIC TECHNOLOGIES, LLC AND SHOULD NOT BE USED WITHOUT WRITTEN PERMISSION

DIMENSION UNITS	SCALE
mm	4:1

GENERAL TOLERANCES (UNLESS SPECIFIED)		
ANGULAR TOL	±	1.0 °
4 PLACES	±	
3 PLACES	±	
2 PLACES	±	0.1
1 PLACE	±	0.2
0 PLACES	±	

DRAFT WHERE APPLICABLE MUST REMAIN WITHIN DIMENSIONS

CURRENT REV DESC:

EC NO: 643941
DRWN: XLDONG03 2020/08/21
CHK'D: JDENG02 2020/08/26
APPR: JDENG02 2020/08/26

INITIAL REVISION:
DRWN: APROFFITT 2015/11/04
APPR: KDEKOSKI 2016/06/14

molex

MX150 RCPT
SINGLE ROW SEALED ASSY MAT SEAL

PRODUCT CUSTOMER DRAWING

DOCUMENT NUMBER	DOC TYPE	DOC PART	REVISION
SD-33471-0001	PSD	001	A1

THIRD ANGLE PROJECTION	DRAWING	SERIES	MATERIAL NUMBER	CUSTOMER	SHEET NUMBER
	D-SIZE	33471	SEE NOTE 2a	GENERAL MARKET	8 OF 8

DOCUMENT STATUS	P1	RELEASE DATE	2020/08/26 07:23:52

FORMAT: model-10-prod-D
REVISION: J
DATE: 2020/01/14

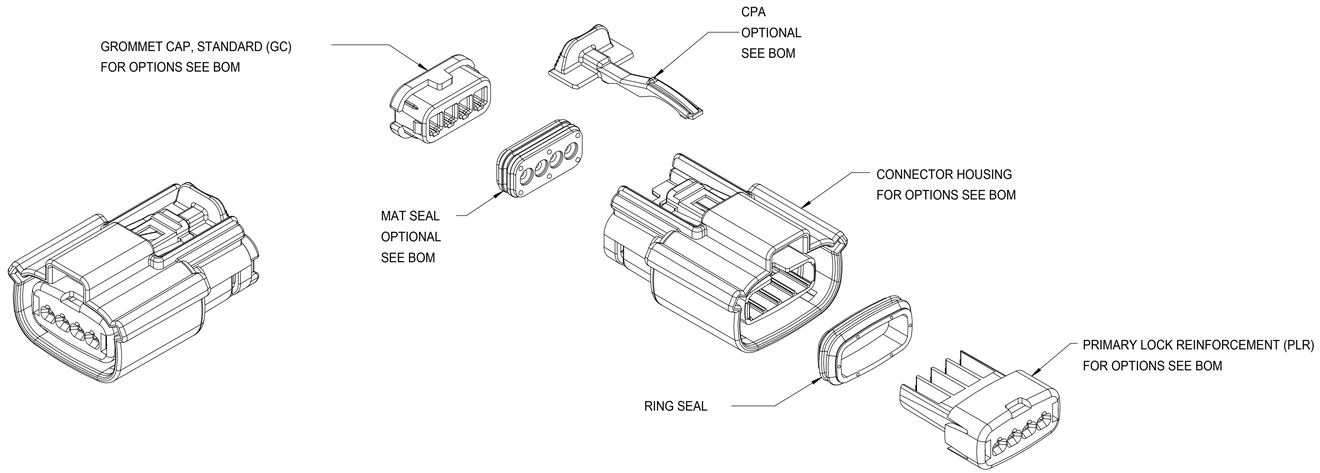

MX150 1X4 RECEPTACLE SEALED ASSEMBLY - STANDARD (STD)

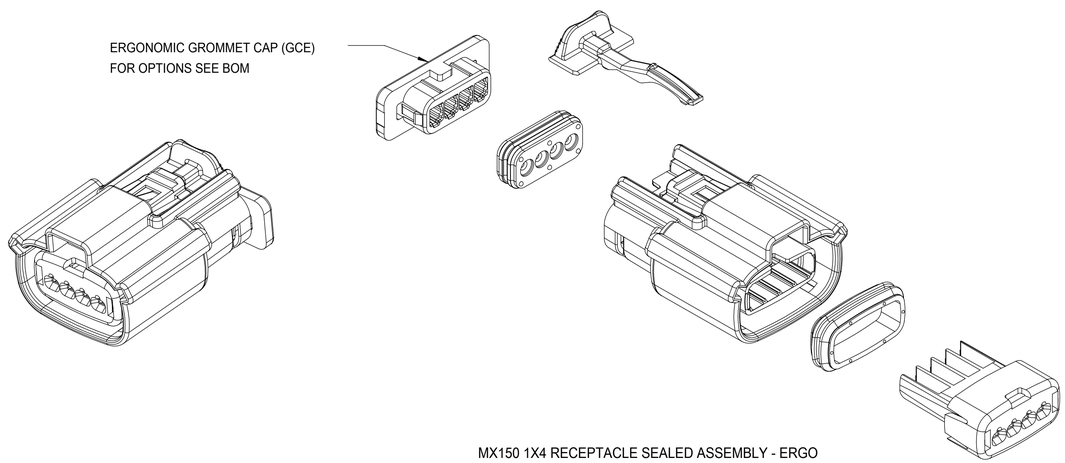

MX150 1X4 RECEPTACLE SEALED ASSEMBLY - ERGO
UNLESS COMPONENT NOTED, SEE STANDARD ASSEMBLY

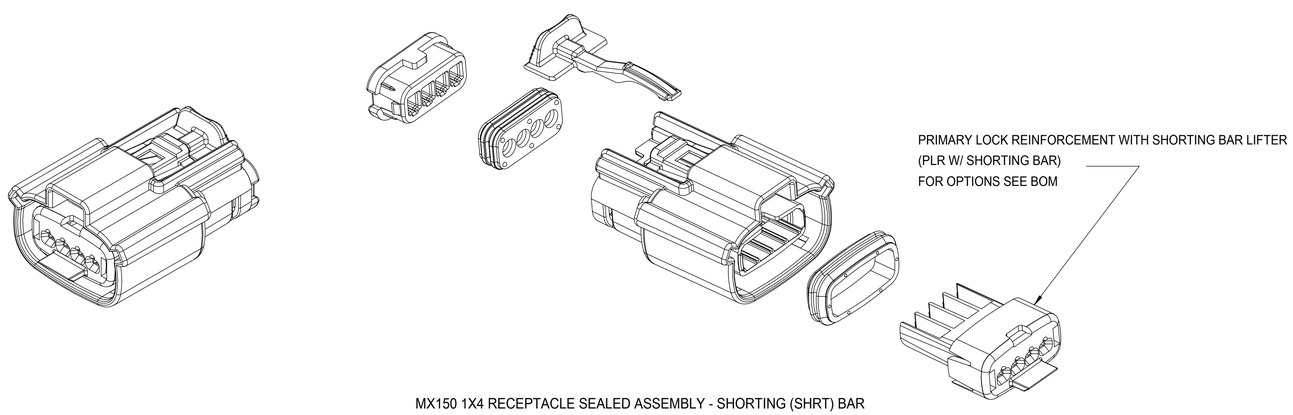

MX150 1X4 RECEPTACLE SEALED ASSEMBLY - SHORTING (SHRT) BAR
UNLESS COMPONENT NOTED, SEE STANDARD ASSEMBLY

TABLE OF CONTENTS

SHEET NO.	SHEET DESCRIPTION
1	NOTES
2	KEY CONFIGURATIONS
3	RECEPTACLE SEALED ASSEMBLY
4-5	BOM

NOTES: VALID UNLESS OTHERWISE SPECIFIED

1. GENERAL:
a. APPLICATION SPECIFICATION SEE: AS-33472-100
-CONTAINS: PRODUCT INTRODUCTION, PRODUCT SUMMARY, CONNECTOR ASSEMBLY, PACKAGING INFORMATION, CONNECTOR MATING, SERVICE INSTRUCTIONS, ELECTRICAL CONTINUITY CHECKING, CRIMPING, AND TROUBLESHOOTING.
-STANDARD (NON-SHRT) CONFIGURATIONS DESIGNED TO MATE WITH DEVICE CONNECTION AS SPECIFIED IN DRAWING SD-33481-041 AND EWCAP 150-S-004-1-Z03, AVAILIBLE AT http://ewcap.uscarteams.org/
-SHORTING BAR CONFIGURATIONS DESIGNED TO MATE WITH BLADE SEALED ASSEMBLY SPECIFIED IN DRAWING SD-31280-200
-FOR 1.5mm RECEPTACLE TERMINALS TO BE USED WITH THIS ASSEMBLY. SEE MOLEX DRAWING SD-33012-002.
-SYSTEM TO BE USED WITH WIRE WITHIN DIAMETER RANGE OF 1.2mm TO 2.69mm.
-ASSEMBLY SHIPPED WITH PLR AND CPA IN PRE-LOCK POSITION (SEE SECTION Z-Z PRE-LOCK).
-IN THE EVENT THAT THE PLR IS FOUND IN THE SEATED (FINAL LOCK) POSITION, REFER TO MOLEX SPECIFICATION PS-34646-001, AVAILABLE AT www.molex.com <http://www.molex.com>.
-ASSEMBLY CONFORMS TO SAE/USCAR-2 REV 4 WITH THE FOLLOWING EXCEPTIONS:
ENGAGEMENT FORCE TO MOVE CPA FROM PRE-LOCK TO FINAL LOCK POSITION WHEN UNMATED: 40N MIN.
DISENGAGEMENT FORCE TO MOVE CPA FROM FINAL LOCK TO PRE-LOCK POSITION: 3N MIN, 40N MAX.
TERMINAL INSERTION FORCE FOR WIRE DIAMETER ABOVE 2.5mm AND NOT EXCEEDING 2.69mm SHALL NOT EXCEED 40 NEWTONS.
b. PRODUCT SPECIFICATION SEE: PS-33471-000
CONTAINS: PRODUCT INTRODUCTION, PRODUCT SUMMARY, RATINGS (CURRENT, TEMPERATURE, SEALING, AND FLAMMABILITY), AND PRODUCT VALIDATION.
c. PACKAGING SPECIFICATION PER MOLEX DRAWING: PK-31300-903
d. PARTS MUST BE IN COMPLIANCE TO MOLEX CHEMICAL SUBSTANCES FOR PRODUCTS AND PACKAGING SPECIFICATION: ES-40000-5016
e. DATA MUST BE SUBMITTED UNDER THE MOLEX PART NUMBER TO IMDS (COMPANY ID#13255)

2. DESIGN - MATERIALS:
a. SEE BOM TABLE

3. DESIGN - GEOMETRY:
a. THIS IS A 100% CAD GENERATED PART. THE CAD MATHEMATICAL DATA IS THE MASTER FOR THIS PART. FOR DIMENSIONAL OR ANY INFORMATION NOT SHOWN ON THIS DRAWING, ANALYZE THE CAD MODEL.
b. GEOMETRIC DIMENSIONS AND TOLERANCES PER ASME Y14.5M - 1994
c. EDGES AND UNDIMENSIONED DETAILS PER ISO13715
d. CORNERS SHOWN AS SHARP TO BE R 0.2 MAX.
e. LETTERING SHALL BE 0.15 MAX RAISED IN 0.25 MAX RECESS PAD. THIS INCLUDES RECYCLING CODE, CAVITY ID, VENDOR IDENTIFICATION, AND CUSTOMER MATERIAL NUMBER.
f. VISUAL DEFECTS SHALL MEET COSMETIC STANDARD PS-45499-002 (Class B)
g. LASER MARKING: TBD

INSPECTION NUMBER LOG
LAST NUMBER USED: 5
ADDED:
REMOVED: 2

REV	DESCRIPTION
W6	ADD NEW P/N 33471-0497
W5	ADD NEW P/N 33471-0496
W4	ADD NEW P/N 33471-0495
W3	UPDATED THE DRAWING FRAME
W2	ADD NEW P/N 33471-0494
W1	ADD NEW P/N 33471-0493
W	REMOVE THE 33471-0489 CPA

THIS DRAWING CONTAINS INFORMATION THAT IS PROPRIETARY TO MOLEX ELECTRONIC TECHNOLOGIES, LLC AND SHOULD NOT BE USED WITHOUT WRITTEN PERMISSION

FUNCTIONAL SYMBOLS: FA = 0, FC = 0, FP = 0
DIVISIONAL SYMBOLS

DIMENSION UNITS	SCALE
mm	2:1

GENERAL TOLERANCES (UNLESS SPECIFIED)

ANGULAR TOL	±	3.0 °
4 PLACES	±	
3 PLACES	±	
2 PLACES	±	0.1
1 PLACE	±	0.3
0 PLACES	±	

DRAFT WHERE APPLICABLE MUST REMAIN WITHIN DIMENSIONS

CURRENT REV DESC: SEE REVISION TABLE

EC NO: 674870
DRWN: SCV 2021/08/23
CHK'D: GGA 2021/08/27
APPR: GGA 2021/08/27

INITIAL REVISION:
DRWN: DGRIFFITHS 2010/03/31
APPR: VKOSHY 2010/04/06

THIRD ANGLE PROJECTION | DRAWING: D-SIZE | SERIES: 33471

molex

MX150 1X4 RECEPTACLE SEALED ASSEMBLY MAT SEAL

PRODUCT CUSTOMER DRAWING

DOCUMENT NUMBER	DOC TYPE	DOC PART	REVISION
SD-33471-041	PSD	002	W6

MATERIAL NUMBER	CUSTOMER	SHEET NUMBER
SEE BOM	GENERAL MARKET	1 OF 6

DOCUMENT STATUS	P1	RELEASE DATE	2021/08/27 04:44:52

TEMPLATE: molex-landscape
REVISION: J
DATE: 2020/01/14

KEY CONFIGURATIONS

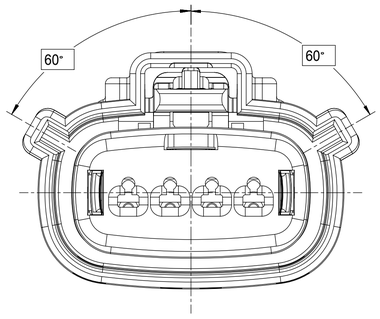

KEY A

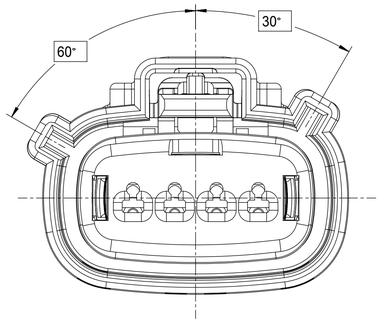

KEY B

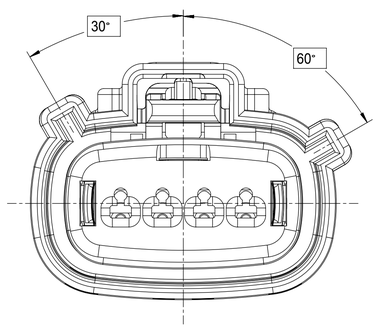

KEY C

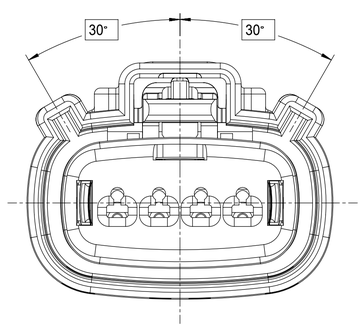

KEY D

FUNCTIONAL SYMBOLS	THIS DRAWING CONTAINS INFORMATION THAT IS PROPRIETARY TO MOLEX ELECTRONIC TECHNOLOGIES, LLC AND SHOULD NOT BE USED WITHOUT WRITTEN PERMISSION				
FA = 0	DIMENSION UNITS: mm	SCALE: 4:1	CURRENT REV DESC: SEE REVISION TABLE		molex
FC = 0	GENERAL TOLERANCES (UNLESS SPECIFIED)				MX150 1X4 RECEPTACLE SEALED ASSEMBLY MAT SEAL
FP = 0	ANGULAR TOL ± 3.0 °		EC NO: 674870		
	4 PLACES ±		DRWN: SCV	2021/08/23	
DIVISIONAL SYMBOLS	3 PLACES ±		CHK'D: GGA	2021/08/27	PRODUCT CUSTOMER DRAWING
	2 PLACES ± 0.1		APPR: GGA	2021/08/27	
	1 PLACE ± 0.3		INITIAL REVISION:		
	0 PLACES ±		DRWN: DGRIFFITHS	2010/03/31	
	DRAFT WHERE APPLICABLE MUST REMAIN WITHIN DIMENSIONS		APPR: VKOSHY	2010/04/06	

THIRD ANGLE PROJECTION	DRAWING	SERIES	MATERIAL NUMBER	CUSTOMER	SHEET NUMBER
	D-SIZE	33471	SEE BOM	GENERAL MARKET	2 OF 6

DOCUMENT NUMBER	DOC TYPE	DOC PART	REVISION
SD-33471-041	PSD	002	W6

DOCUMENT STATUS	P1	RELEASE DATE	2021/08/27 04:44:52

TEMPLATE: PRODUCT-PS-A3-MOLEX
REVISION: J
DATE: 2020/01/14

RECEPTACLE SEALED ASSEMBLY

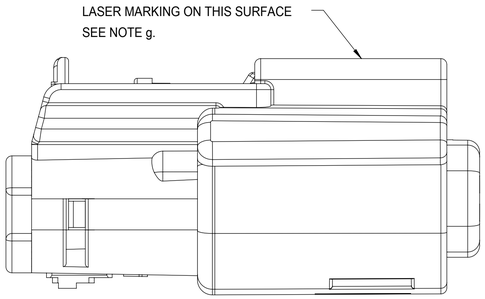

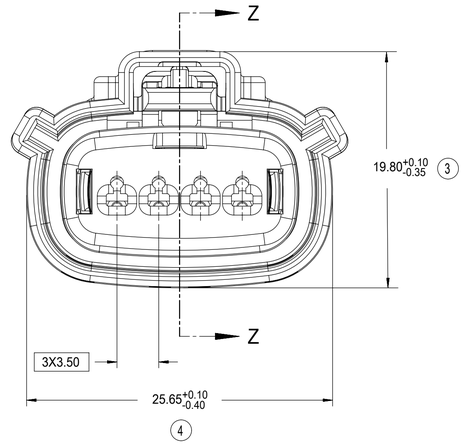

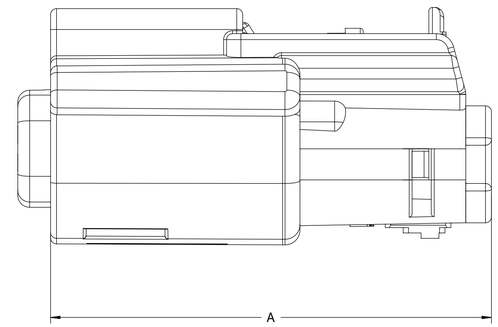

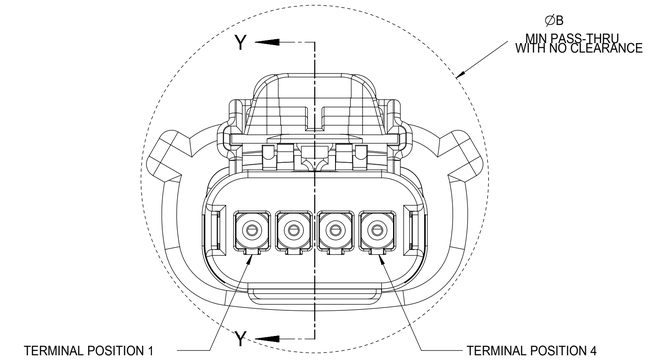

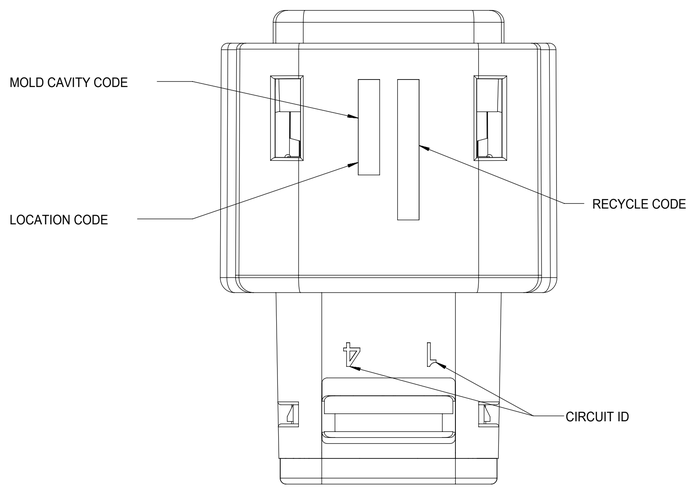

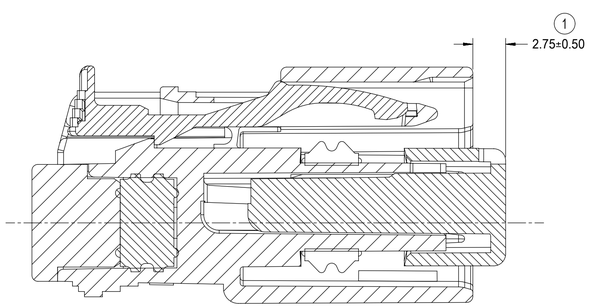

PRIMARY LOCK REINFORCEMENT (PLR) SHOWN
IN PRE-STAGED POSITION

SECTION Z-Z

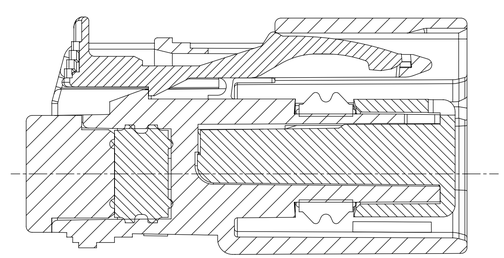

PRIMARY LOCK REINFORCEMENT (PLR) SHOWN
IN FINAL-LOCK POSITION

SECTION Y-Y

CHARTED DIMENSIONS

CONFIGURATION	A	B
MX150 1X4 RECPT SEALED ASSY - STANDARD	36.95 ±0.70	29.14
MX150 1X4 RECPT SEALED ASSY - ERGO	36.95 ±0.90	29.33
MX150 1X4 RECPT SEALED ASSY - SHORTING (SHRT) BAR	36.95 ±0.70	29.14

FUNCTIONAL SYMBOLS
FA = 0
FC = 0
FP = 0
DIVISIONAL SYMBOLS

THIS DRAWING CONTAINS INFORMATION THAT IS PROPRIETARY TO MOLEX ELECTRONIC TECHNOLOGIES, LLC AND SHOULD NOT BE USED WITHOUT WRITTEN PERMISSION

DIMENSION UNITS	SCALE
mm	4:1

GENERAL TOLERANCES (UNLESS SPECIFIED)

ANGULAR TOL	±	3.0 °
4 PLACES	±	
3 PLACES	±	
2 PLACES	±	0.1
1 PLACE	±	0.3
0 PLACES	±	

DRAFT WHERE APPLICABLE MUST REMAIN WITHIN DIMENSIONS

CURRENT REV DESC: SEE REVISION TABLE

EC NO: 674870
DRWN: SCV 2021/08/23
CHK'D: GGA 2021/08/27
APPR: GGA 2021/08/27

INITIAL REVISION:
DRWN: DGRIFFITHS 2010/03/31
APPR: VKOSHY 2010/04/06

molex

MX150 1X4 RECEPTACLE
SEALED ASSEMBLY MAT SEAL

PRODUCT CUSTOMER DRAWING

DOCUMENT NUMBER	DOC TYPE	DOC PART	REVISION
SD-33471-041	PSD	002	W6

THIRD ANGLE PROJECTION	DRAWING	SERIES	MATERIAL NUMBER	CUSTOMER	SHEET NUMBER
	D-SIZE	33471	SEE BOM	GENERAL MARKET	3 OF 6

DOCUMENT STATUS	P1	RELEASE DATE	2021/08/27 04:44:52

FORMAT: molex-B-prod-D
TEMPLATE:
DATE: 2016/01/14

BOM SHEET 1

ASSEMBLY DESCRIPTION	ASSEMBLY PART NUMBER	A	B	C	D	C	C	D	GCO	GCP	GCEO	GCEP	P	PS	M	CPA	1	2	3	4	STATUS	COMMENTS
VOID KEY	33471-0440																					
KEY D W/ SHRT. BAR, GREEN	33471-0439				D				GCO					PS	M						NOT RECOMMENDED	SEE P/N 33471-0481
KEY C W/ SHRT. BAR, BROWN	33471-0438			C					GCO					PS	M						NOT RECOMMENDED	SEE P/N 33471-0480
KEY B W/ SHRT. BAR, LT. GRAY	33471-0437		B						GCO					PS	M							
KEY A W/ SHRT. BAR, BLACK	33471-0436	A							GCO					PS	M						SALEABLE	
VOID KEY	33471-0435																					
KEY D W/O MAT SEAL, GREEN	33471-0434				D				GCO				P								NOT RECOMMENDED	SEE P/N 33471-0479
KEY C W/O MAT SEAL, BROWN	33471-0433			C					GCO				P								NOT RECOMMENDED	SEE P/N 33471-0478
KEY B W/O MAT SEAL, LT. GRAY	33471-0432		B						GCO				P									NOT VALIDATED
KEY A W/O MAT SEAL, BLACK	33471-0431	A							GCO				P								SALEABLE	NOT VALIDATED
VOID KEY	33471-0430																					
KEY D W/ CPA, GREEN	33471-0429				D					GCP			P		M	CPA	1			4	NOT RECOMMENDED	SEE P/N 33471-0477
KEY C W/ CPA, BROWN	33471-0428			C						GCP			P		M	CPA	1			4	NOT RECOMMENDED	SEE P/N 33471-0476
KEY B W/ CPA, LT. GRAY	33471-0427		B							GCP			P		M	CPA	1			4		
KEY A W/ CPA, BLACK	33471-0426	A								GCP			P		M	CPA	1			4	SALEABLE	
VOID KEY	33471-0425																					
KEY D, GREEN	33471-0424				D					GCP			P		M		1			4	NOT RECOMMENDED	SEE P/N 33471-0475
KEY C, BROWN	33471-0423			C						GCP			P		M		1			4	NOT RECOMMENDED	SEE P/N 33471-0474
KEY B, LT. GRAY	33471-0422		B							GCP			P		M		1			4		
KEY A, BLACK	33471-0421	A								GCP			P		M		1			4	SALEABLE	
VOID KEY	33471-0420																					
KEY D W/ CPA, GREEN	33471-0419				D					GCP			P		M	CPA				4	NOT RECOMMENDED	SEE P/N 33471-0473
KEY C W/ CPA, BROWN	33471-0418			C						GCP			P		M	CPA				4	NOT RECOMMENDED	SEE P/N 33471-0472
KEY B W/ CPA, LT. GRAY	33471-0417		B							GCP			P		M	CPA				4		
KEY A W/ CPA, BLACK	33471-0416	A								GCP			P		M	CPA				4	SALEABLE	
VOID KEY	33471-0415																					
KEY D, GREEN	33471-0414				D					GCP			P		M					4	NOT RECOMMENDED	SEE P/N 33471-0471
KEY C, BROWN	33471-0413			C						GCP			P		M					4	NOT RECOMMENDED	SEE P/N 33471-0470
KEY B, LT. GRAY	33471-0412		B							GCP			P		M					4		
KEY A, BLACK	33471-0411	A								GCP			P		M					4	SALEABLE	
KEY C W/ CPA, BLACK	33471-0410					C			GCO				P		M	CPA						
KEY D W/ CPA, GREEN	33471-0409				D				GCO				P		M	CPA					NOT RECOMMENDED	SEE P/N 33471-0465
KEY C W/ CPA, BROWN	33471-0408			C					GCO				P		M	CPA					NOT RECOMMENDED	SEE P/N 33471-0464
KEY B W/ CPA, LT. GRAY	33471-0407		B						GCO				P		M	CPA						
KEY A W/ CPA, BLACK	33471-0406	A							GCO				P		M	CPA					SALEABLE	
VOID KEY	33471-0405																					
KEY D, GREEN	33471-0404				D				GCO				P		M						NOT RECOMMENDED	SEE P/N 33471-0463
KEY C, BROWN	33471-0403			C					GCO				P		M						NOT RECOMMENDED	SEE P/N 33471-0462
KEY B, LT. GRAY	33471-0402		B						GCO				P		M							
KEY A, BLACK	33471-0401	A							GCO				P		M						SALEABLE	

BLOCKED TERMINAL

CAVITY WITH A NUMBER INDICATES BLOCKED TERMINAL POSITION
CAVITY WITHOUT A NUMBER INDICATES OPEN TERMINAL POSITION

DESCRIPTION	COLOR	MATERIAL
RING SEAL	BURNT ORANGE	INHERENTLY LUBRICATED SILICONE
CPA	BRIGHT RED	PBT GF30
MAT SEAL	LIGHT BLUE	INHERENTLY LUBRICATED SILICONE
SHORTING BAR PLR	NATURAL	SPS/NYLON GF20
STANDARD PLR	NATURAL	SPS/NYLON GF20
ERGONOMIC GROMMET CAP, PLUGGED	BLACK	SPS/NYLON GF20
ERGONOMIC GROMMET CAP, OPEN	BLACK	SPS/NYLON GF20
STANDARD GROMMET CAP, PLUGGED	BLACK	SPS/NYLON GF20
STANDARD GROMMET CAP, OPEN	BLACK	SPS/NYLON GF20
HOUSING KEYING OPTION D	STONE GRAY	SPS/NYLON GF20
HOUSING KEYING OPTION C	DARK GRAY	SPS/NYLON GF20
HOUSING KEYING OPTION C	BLACK	SPS/NYLON GF20
HOUSING KEYING OPTION D	GREEN	SPS/NYLON GF20
HOUSING KEYING OPTION C	BROWN	SPS/NYLON GF20
HOUSING KEYING OPTION B	LIGHT GRAY	SPS/NYLON GF20
HOUSING KEYING OPTION A	BLACK	SPS/NYLON GF20

BOM/APPLICABLE COMPONENTS TABLE

TABLE LEGEND

ABREVIATION	COMPONENT
A	HOUSING KEY A
B	HOUSING KEY B
C	HOUSING KEY C
D	HOUSING KEY D
GCO	GROMMET CAP, STANDARD, OPEN
GCP	GROMMET CAP, STANDARD, PLUGGED
GCEO	GROMMET CAP, ERGONOMIC, OPEN
GCEP	GROMMET CAP, ERGONOMIC, PLUGGED
M	MAT SEAL
P	PLR, STANDARD
PS	PLR, SHRT. BAR LIFTER
R	RING SEAL
CPA	CPA

THIS DRAWING CONTAINS INFORMATION THAT IS PROPRIETARY TO MOLEX ELECTRONIC TECHNOLOGIES, LLC AND SHOULD NOT BE USED WITHOUT WRITTEN PERMISSION

FUNCTIONAL SYMBOLS
FA = 0
FC = 0
FP = 0
DIVISIONAL SYMBOLS

DIMENSION UNITS: mm
SCALE

GENERAL TOLERANCES (UNLESS SPECIFIED)

ANGULAR TOL	±	3.0 °
4 PLACES	±	
3 PLACES	±	
2 PLACES	±	0.1
1 PLACE	±	0.3
0 PLACES	±	

DRAFT WHERE APPLICABLE MUST REMAIN WITHIN DIMENSIONS

CURRENT REV DESC: SEE REVISION TABLE

EC NO: 674870
DRWN: SCV 2021/08/23
CHK'D: GGA 2021/08/27
APPR: GGA 2021/08/27

INITIAL REVISION:
DRWN: DGRIFFITHS 2010/03/31
APPR: VKOSHY 2010/04/06

THIRD ANGLE PROJECTION

DRAWING: D-SIZE
SERIES: 33471

molex

MX150 1X4 RECEPTACLE
SEALED ASSEMBLY MAT SEAL

PRODUCT CUSTOMER DRAWING

DOCUMENT NUMBER	DOC TYPE	DOC PART	REVISION
SD-33471-041	PSD	002	W6

MATERIAL NUMBER	CUSTOMER	SHEET NUMBER
SEE BOM	GENERAL MARKET	4 OF 6

DOCUMENT STATUS	P1	RELEASE DATE	2021/08/27	04:44:52

FORMAT: master-tb-prod-D
REVISION: J
DATE: 2006/01/10

BOM SHEET 2

ASSEMBLY DESCRIPTION	ASSEMBLY PART NUMBER	A	B	C	D	C	C	D	GCO	GCP	GCEO	GCEP	P	PS	M	CPA	1	2	3	4	STATUS	COMMENTS
KEY C W/ SHRT. BAR, DARK GRAY	33471-0480						C		GCO					PS	M						SALEABLE	
KEY D W/O MAT SEAL, STONE GRAY	33471-0479							D	GCO				P								SALEABLE	
KEY C W/O MAT SEAL, DARK GRAY	33471-0478						C		GCO				P								SALEABLE	
KEY D W/ CPA, STONE GRAY	33471-0477							D		GCP			P		M	CPA	1			4	SALEABLE	
KEY C W/ CPA, DARK GRAY	33471-0476						C			GCP			P		M	CPA	1			4	SALEABLE	
KEY D, STONE GRAY	33471-0475							D		GCP			P		M		1			4	SALEABLE	
KEY C, DARK GRAY	33471-0474						C			GCP			P		M		1			4	SALEABLE	
KEY D W/ CPA, STONE GRAY	33471-0473							D		GCP			P		M	CPA				4	SALEABLE	
KEY C W/ CPA, DARK GRAY	33471-0472						C			GCP			P		M	CPA				4	SALEABLE	
KEY D, STONE GRAY	33471-0471							D		GCP			P		M					4	SALEABLE	
KEY C, DARK GRAY	33471-0470						C			GCP			P		M					4	SALEABLE	
KEY A, BLACK	33471-0469	A								GCP			P		M			2		4	SALEABLE	
KEY B, W/ CPA, LIGHT GRAY	33471-0468		B							GCP			P		M	CPA		2				
KEY A, BLACK	33471-0467	A								GCP			P		M				3	4	SALEABLE	
KEY B, LIGHT GRAY	33471-0466		B							GCP			P		M		1	2				
KEY D W/ CPA, STONE GRAY	33471-0465							D	GCO				P		M	CPA					SALEABLE	
KEY C W/ CPA, DARK GRAY	33471-0464						C		GCO				P		M	CPA					SALEABLE	
KEY D, STONE GRAY	33471-0463							D	GCO				P		M						SALEABLE	
KEY C, DARK GRAY	33471-0462						C		GCO				P		M						SALEABLE	
KEY A W/ CPA & ERGO. CAP, BLACK	33471-0461	A									GCEO		P		M	CPA					SALEABLE	
VOID KEY	33471-0460																					
KEY A, BLACK	33471-0459	A								GCP			P		M				3		SALEABLE	
KEY A W/ SHRT. BAR, BLACK	33471-0458	A								GCP				PS	M		1			4	SALEABLE	
KEY D W/ SHRT. BAR, GREEN	33471-0457				D					GCP				PS	M					4	NOT RECOMMENDED	SEE P/N 33471-0488
VOID KEY	33471-0456																					
KEY D W/ SHRT. BAR, GREEN	33471-0455				D					GCP				PS	M		1	2	3	4	NOT RECOMMENDED	SEE P/N 33471-0487
KEY C W/ SHRT. BAR, BROWN	33471-0454			C						GCP				PS	M		1	2	3	4	NOT RECOMMENDED	SEE P/N 33471-0486
KEY B W/ SHRT. BAR, LT. GRAY	33471-0453		B							GCP				PS	M		1	2	3	4		
KEY A W/ SHRT. BAR, BLACK	33471-0452	A								GCP				PS	M		1	2	3	4	SALEABLE	
KEY A W/ SHRT. BAR, BLACK	33471-0451	A								GCP				PS	M				3	4	SALEABLE	
VOID KEY	33471-0450																					
KEY D W/ CPA & SHRT. BAR, GREEN	33471-0449				D				GCO					PS	M	CPA					NOT RECOMMENDED	SEE P/N 33471-0485
KEY C W/ CPA & SHRT. BAR, BROWN	33471-0448			C					GCO					PS	M	CPA					NOT RECOMMENDED	SEE P/N 33471-0484
KEY B W/ CPA & SHRT. BAR, LT. GRAY	33471-0447		B						GCO					PS	M	CPA						
KEY A W/ CPA & SHRT. BAR, BLACK	33471-0446	A							GCO					PS	M	CPA					SALEABLE	
VOID KEY	33471-0445																					
KEY D, GREEN	33471-0444				D					GCP			P		M		1	2	3	4	NOT RECOMMENDED	SEE P/N 33471-0483
KEY C, BROWN	33471-0443			C						GCP			P		M		1	2	3	4	NOT RECOMMENDED	SEE P/N 33471-0482
KEY B, LT. GRAY	33471-0442		B							GCP			P		M		1	2	3	4		
KEY A, BLACK	33471-0441	A								GCP			P		M		1	2	3	4	SALEABLE	

BLOCKED TERMINAL

CAVITY WITH A NUMBER INDICATES BLOCKED TERMINAL POSITION
CAVITY WITHOUT A NUMBER INDICATES OPEN TERMINAL POSITION

DESCRIPTION	COLOR	MATERIAL
RING SEAL	BURNT ORANGE	INHERENTLY LUBRICATED SILICONE
CPA	BRIGHT RED	PBT GF30
MAT SEAL	LIGHT BLUE	INHERENTLY LUBRICATED SILICONE
SHORTING BAR PLR	NATURAL	SPS/NYLON GF20
STANDARD PLR	NATURAL	SPS/NYLON GF20
ERGONOMIC GROMMET CAP, PLUGGED	BLACK	SPS/NYLON GF20
ERGONOMIC GROMMET CAP, OPEN	BLACK	SPS/NYLON GF20
STANDARD GROMMET CAP, PLUGGED	BLACK	SPS/NYLON GF20
STANDARD GROMMET CAP, OPEN	BLACK	SPS/NYLON GF20
HOUSING KEYING OPTION D	STONE GRAY	SPS/NYLON GF20
HOUSING KEYING OPTION C	DARK GRAY	SPS/NYLON GF20
HOUSING KEYING OPTION C	BLACK	SPS/NYLON GF20
HOUSING KEYING OPTION D	GREEN	SPS/NYLON GF20
HOUSING KEYING OPTION C	BROWN	SPS/NYLON GF20
HOUSING KEYING OPTION B	LIGHT GRAY	SPS/NYLON GF20
HOUSING KEYING OPTION A	BLACK	SPS/NYLON GF20

BOM/APPLICABLE COMPONENTS TABLE

TABLE LEGEND

ABREVIATION	COMPONENT
A	HOUSING KEY A
B	HOUSING KEY B
C	HOUSING KEY C
D	HOUSING KEY D
GCO	GROMMET CAP, STANDARD, OPEN
GCP	GROMMET CAP, STANDARD, PLUGGED
GCEO	GROMMET CAP, ERGONOMIC, OPEN
GCEP	GROMMET CAP, ERGONOMIC, PLUGGED
M	MAT SEAL
P	PLR, STANDARD
PS	PLR, SHRT. BAR LIFTER
R	RING SEAL
CPA	CPA

FUNCTIONAL SYMBOLS: FA = 0, FC = 0, FP = 0

DIVISIONAL SYMBOLS

DIMENSION UNITS	SCALE
mm	

GENERAL TOLERANCES (UNLESS SPECIFIED)

ANGULAR TOL	±	3.0 °
4 PLACES	±	
3 PLACES	±	
2 PLACES	±	0.1
1 PLACE	±	0.3
0 PLACES	±	

DRAFT WHERE APPLICABLE MUST REMAIN WITHIN DIMENSIONS

THIS DRAWING CONTAINS INFORMATION THAT IS PROPRIETARY TO MOLEX ELECTRONIC TECHNOLOGIES, LLC AND SHOULD NOT BE USED WITHOUT WRITTEN PERMISSION

CURRENT REV DESC: SEE REVISION TABLE

EC NO: 674870
DRWN: SCV 2021/08/23
CHK'D: GGA 2021/08/27
APPR: GGA 2021/08/27

INITIAL REVISION:
DRWN: DGRIFFITHS 2010/03/31
APPR: VKOSHY 2010/04/06

THIRD ANGLE PROJECTION | DRAWING: D-SIZE | SERIES: 33471

molex

MX150 1X4 RECEPTACLE
SEALED ASSEMBLY MAT SEAL

PRODUCT CUSTOMER DRAWING

DOCUMENT NUMBER	DOC TYPE	DOC PART	REVISION
SD-33471-041	PSD	002	W6

MATERIAL NUMBER	CUSTOMER	SHEET NUMBER
SEE BOM	GENERAL MARKET	5 OF 6

DOCUMENT STATUS	P1	RELEASE DATE	2021/08/27 04:44:52

BOM SHEET 3

	ASSEMBLY DESCRIPTION	ASSEMBLY PART NUMBER	A	B	C	D	C	C	D	A	GCO	GCP	GCEO	GCEP	P	PS	M	CPA	1	2	3	4	STATUS	COMMENTS
W6	KEY A W/ CPA, BLACK	33471-0497	A									GCP			P		M	CPA			3	4	SALEABLE	
	KEY A W/ CPA, BLACK	33471-0496	A									GCP			P		M	CPA		2	3	4	SALEABLE	
	KEY A , BLACK	33471-0495	A									GCP			P		M		1				SALEABLE	
	KEY B, LT.GRAY	33471-0494		B								GCP			P		M			2	3		SALEABLE	
	KEY A W/ CPA, BLACK	33471-0493	A									GCP			P		M	CPA		2			SALEABLE	
	KEY A W/ CPA & SHRT. BAR, YELLOW	33471-0492								A	GCO					PS	M	CPA					SALEABLE	
	KEY A W/ CPA, YELLOW	33471-0491								A	GCO				P		M	CPA					SALEABLE	
	KEY A W/ CPA, BLACK	33471-0490	A									GCP			P		M	CPA			3		SALEABLE	
	KEY A , BLACK	33471-0489	A									GCP			P		M			2			SALEABLE	
	KEY D W/ SHRT. BAR, STONE GRAY	33471-0488							D			GCP				PS	M					4	SALEABLE	
	KEY D W/ SHRT. BAR, STONE GRAY	33471-0487							D			GCP				PS	M		1	2	3	4	SALEABLE	
	KEY C W/ SHRT. BAR, DARK GRAY	33471-0486						C				GCP				PS	M		1	2	3	4	SALEABLE	
	KEY D W/ CPA & SHRT. BAR, STONE GRAY	33471-0485							D		GCO					PS	M	CPA					SALEABLE	
	KEY C W/ CPA & SHRT. BAR, DARK GRAY	33471-0484						C			GCO					PS	M	CPA					SALEABLE	
	KEY D, STONE GRAY	33471-0483							D			GCP			P		M		1	2	3	4	SALEABLE	
	KEY C, DARK GRAY	33471-0482						C				GCP			P		M		1	2	3	4	SALEABLE	
	KEY D W/ SHRT. BAR, STONE GRAY	33471-0481							D		GCO					PS	M						SALEABLE	

BLOCKED TERMINAL

CAVITY WITH A NUMBER INDICATES BLOCKED TERMINAL POSITION
CAVITY WITHOUT A NUMBER INDICATES OPEN TERMINAL POSITION

DESCRIPTION	COLOR	MATERIAL
RING SEAL	BURNT ORANGE	INHERENTLY LUBRICATED SILICONE
CPA	BRIGHT RED	PBT GF30
MAT SEAL	LIGHT BLUE	INHERENTLY LUBRICATED SILICONE
SHORTING BAR PLR	NATURAL	SPS/NYLON GF20
STANDARD PLR	NATURAL	SPS/NYLON GF20
ERGONOMIC GROMMET CAP, PLUGGED	BLACK	SPS/NYLON GF20
ERGONOMIC GROMMET CAP, OPEN	BLACK	SPS/NYLON GF20
STANDARD GROMMET CAP, PLUGGED	BLACK	SPS/NYLON GF20
STANDARD GROMMET CAP, OPEN	BLACK	SPS/NYLON GF20
HOUSING KEYING OPTION A	YELLOW	SPS/NYLON GF20
HOUSING KEYING OPTION D	STONE GRAY	SPS/NYLON GF20
HOUSING KEYING OPTION C	DARK GRAY	SPS/NYLON GF20
HOUSING KEYING OPTION C	BLACK	SPS/NYLON GF20
HOUSING KEYING OPTION D	GREEN	SPS/NYLON GF20
HOUSING KEYING OPTION C	BROWN	SPS/NYLON GF20
HOUSING KEYING OPTION B	LIGHT GRAY	SPS/NYLON GF20
HOUSING KEYING OPTION A	BLACK	SPS/NYLON GF20

BOM/APPLICABLE COMPONENTS TABLE

TABLE LEGEND

ABREVIATION	COMPONENT
A	HOUSING KEY A
B	HOUSING KEY B
C	HOUSING KEY C
D	HOUSING KEY D
GCO	GROMMET CAP, STANDARD, OPEN
GCP	GROMMET CAP, STANDARD, PLUGGED
GCEO	GROMMET CAP, ERGONOMIC, OPEN
GCEP	GROMMET CAP, ERGONOMIC, PLUGGED
M	MAT SEAL
P	PLR, STANDARD
PS	PLR, SHRT. BAR LIFTER
R	RING SEAL
CPA	CPA

DOCUMENT STATUS	P1	RELEASE DATE	2021/08/27 04:44:52

FUNCTIONAL SYMBOLS: FA = 0, FC = 0, FP = 0

DIVISIONAL SYMBOLS

THIS DRAWING CONTAINS INFORMATION THAT IS PROPRIETARY TO MOLEX ELECTRONIC TECHNOLOGIES, LLC AND SHOULD NOT BE USED WITHOUT WRITTEN PERMISSION

DIMENSION UNITS: mm
SCALE

GENERAL TOLERANCES (UNLESS SPECIFIED)

ANGULAR TOL	±	3.0 °
4 PLACES	±	
3 PLACES	±	
2 PLACES	±	0.1
1 PLACE	±	0.3
0 PLACES	±	

DRAFT WHERE APPLICABLE MUST REMAIN WITHIN DIMENSIONS

CURRENT REV DESC: SEE REVISION TABLE

EC NO: 674870
DRWN: SCV 2021/08/23
CHK'D: GGA 2021/08/27
APPR: GGA 2021/08/27

INITIAL REVISION:
DRWN: DGRIFFITHS 2010/03/31
APPR: VKOSHY 2010/04/06

molex

MX150 1X4 RECEPTACLE
SEALED ASSEMBLY MAT SEAL

PRODUCT CUSTOMER DRAWING

DOCUMENT NUMBER	DOC TYPE	DOC PART	REVISION
SD-33471-041	PSD	002	W6

THIRD ANGLE PROJECTION	DRAWING	SERIES	MATERIAL NUMBER	CUSTOMER	SHEET NUMBER
	D-SIZE	33471	SEE BOM	GENERAL MARKET	6 OF 6

TABLE OF CONTENTS

SHEET NO.	SHEET DESCRIPTION
1	NOTES
2	KEY CONFIGURATIONS
3	BLADE SEALED ASSEMBLY
4	SYSTEM PACKAGING
5	BOM

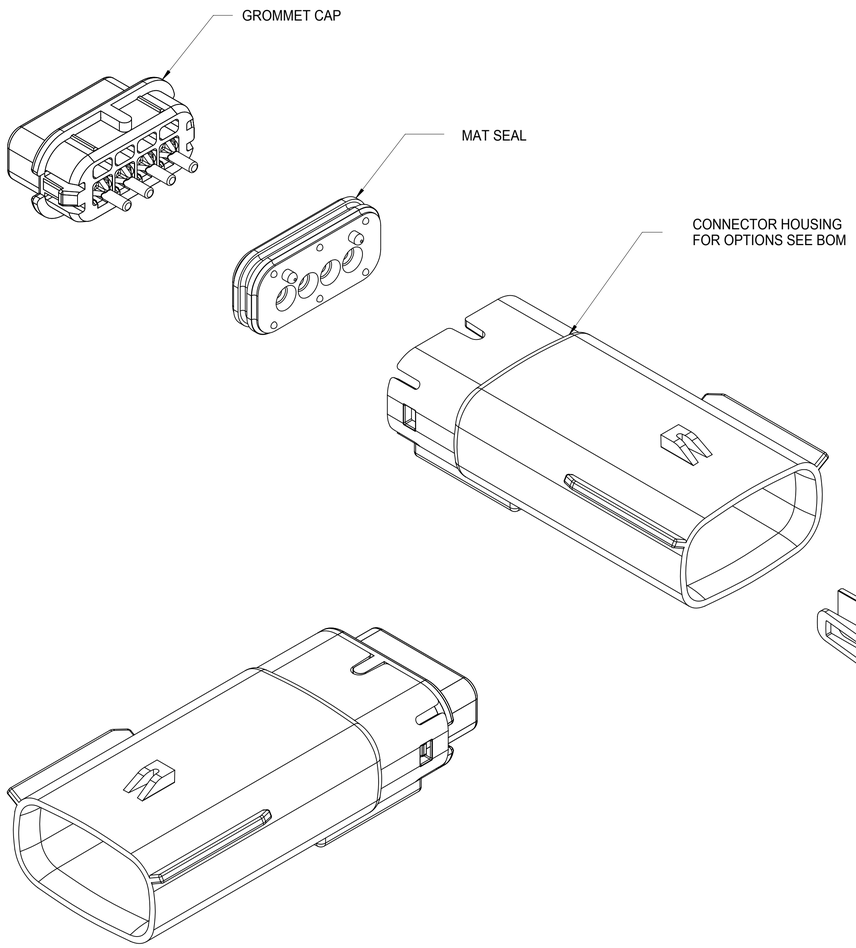

NOTES: VALID UNLESS OTHERWISE SPECIFIED

1. GENERAL:
a. APPLICATION SPECIFICATION SEE: AS-33472-100
CONTAINS: PRODUCT INTRODUCTION, PRODUCT SUMMARY, CONNECTOR ASSEMBLY, PACKAGING INFORMATION, CONNECTOR MATING, SERVICE INSTRUCTIONS, ELECTRICAL CONTINUITY CHECKING, CRIMPING, AND TROUBLESHOOTING.
-DESIGNED TO MATE WITH RECEPTACLE SEALED ASSEMBLY SPECIFIED IN MOLEX DRAWING SD-33471-041.
-FOR 1.5mm BLADE TERMINALS TO BE USED WITH THIS ASSEMBLY SEE MOLEX DRAWING SD-33000-001.
- SYSTEM TO BE USED WITH WIRE WITHIN DIAMETER RANGE OF 1.2mm TO 2.69mm.
-ASSEMBLY SHIPPED WITH PLR IN PRE-LOCK POSITION
-IN THE EVENT THAT THE PLR IS FOUND IN THE SEATED (FINAL LOCK) POSITION, REFER TO MOLEX SPECIFICATION PS-34646-001, AVAILABLE AT www.molex.com <http://www.molex.com>
-ASSEMBLY CONFORMS TO SAE/USCAR-2 REV.4 WITH THE FOLLOWING EXCEPTIONS: TERMINAL INSERTION FORCE FOR WIRE DIAMETER ABOVE 2.5mm NOT EXCEEDING 2.69mm SHALL NOT EXCEED 45 NEWTONS.
b. PRODUCT SPECIFICATION SEE: PS-33471-000
CONTAINS: PRODUCT INTRODUCTION, PRODUCT SUMMARY, RATINGS (CURRENT, TEMPERATURE, SEALING, AND FLAMMABILITY), AND PRODUCT VALIDATION.
c. PACKAGING SPECIFICATION PER MOLEX DRAWING: PK-31300-635
d. PARTS MUST BE IN COMPLIANCE TO MOLEX CHEMICAL SUBSTANCES FOR PRODUCTS AND PACKAGING SPECIFICATION: ES-40000-5016
e. DATA MUST BE SUBMITTED UNDER THE MOLEX PART NUMBER TO IMDS (COMPANY ID#13255)
f. FOR INFORMATION ON 1X4 BLADE SEALED ASSEMBLY WITH SHORTING BAR SEE SD-31280-200.

2. DESIGN - MATERIALS:
a. CONNECTOR HOUSING, GROMMET CAP, PLR: SPS/NYLON BLEND 20% GLASS FILLED
b. MAT SEAL: INHERENTLY LUBRICATED SILICONE

3. DESIGN - GEOMETRY:
a. THIS IS A 100% CAD GENERATED PART. THE CAD MATHEMATICAL DATA IS THE MASTER FOR THIS PART. FOR DIMENSIONAL OR ANY INFORMATION NOT SHOWN ON THIS DRAWING, ANALYZE THE CAD MODEL.
b. GEOMETRIC DIMENSIONS AND TOLERANCES PER ASME Y14.5M - 1994
c. EDGES AND UNDIMENSIONED DETAILS PER ISO13715
d. CORNERS SHOWN AS SHARP TO BE R 0.2 MAX.
e. LETTERING SHALL BE 0.15 MAX RAISED IN 0.25 MAX RECESS PAD. THIS INCLUDES RECYCLING CODE, CAVITY ID, VENDOR IDENTIFICATION, AND CUSTOMER MATERIAL NUMBER.
f. VISUAL DEFECTS SHALL MEET COSMETIC STANDARD PS-45499-002 (Class B)
g. LASER MARKING: TBD

THIS DRAWING CONTAINS INFORMATION THAT IS PROPRIETARY TO MOLEX ELECTRONIC TECHNOLOGIES, LLC AND SHOULD NOT BE USED WITHOUT WRITTEN PERMISSION

DIMENSION UNITS	SCALE
mm	3:1

GENERAL TOLERANCES (UNLESS SPECIFIED)

ANGULAR TOL	±	3.0 °
4 PLACES	±	
3 PLACES	±	
2 PLACES	±	0.1
1 PLACE	±	0.3
0 PLACES	±	

DRAFT WHERE APPLICABLE MUST REMAIN WITHIN DIMENSIONS

CURRENT REV DESC: UPDATED PARTS
STATUS

EC NO: 645317
DRWN: MKP 2020/08/07
CHK'D: MJMITCHELL 2020/09/21
APPR: MJMITCHELL 2020/09/21

INITIAL REVISION:
DRWN: DGRIFFITHS 2005/08/26
APPR: smarceau 2005/08/29

THIRD ANGLE PROJECTION | DRAWING: D-SIZE | SERIES: 33481

molex

MX150 1X4 BLADE
SEALED ASSEMBLY MAT SEAL

PRODUCT CUSTOMER DRAWING

DOCUMENT NUMBER	DOC TYPE	DOC PART	REVISION
SD-33481-041	PSD	001	W3

MATERIAL NUMBER | CUSTOMER: GENERAL MARKET | SHEET NUMBER: 1 OF 5

DOCUMENT STATUS	P1	RELEASE DATE	2020/09/21 14:03:58

KEY CONFIGURATIONS

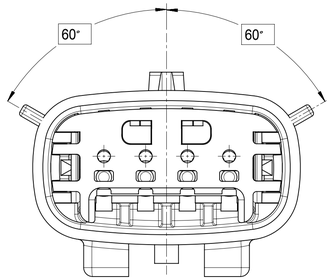

KEY A

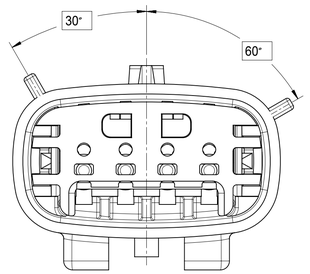

KEY B

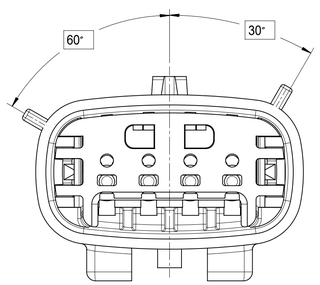

KEY C

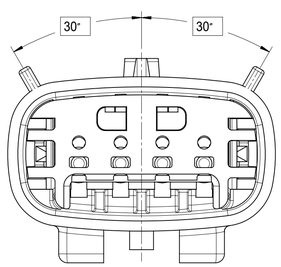

KEY D

THIS DRAWING CONTAINS INFORMATION THAT IS PROPRIETARY TO MOLEX ELECTRONIC TECHNOLOGIES, LLC AND SHOULD NOT BE USED WITHOUT WRITTEN PERMISSION

DIMENSION UNITS	SCALE
mm	4:1

GENERAL TOLERANCES (UNLESS SPECIFIED)

ANGULAR TOL	±	3.0 °
4 PLACES	±	
3 PLACES	±	
2 PLACES	±	0.1
1 PLACE	±	0.3
0 PLACES	±	

DRAFT WHERE APPLICABLE MUST REMAIN WITHIN DIMENSIONS

CURRENT REV DESC: UPDATED PARTS
STATUS

EC NO: 645317
DRWN: MKP 2020/08/07
CHK'D: MJMITCHELL 2020/09/21
APPR: MJMITCHELL 2020/09/21

INITIAL REVISION:
DRWN: DGRIFFITHS 2005/08/26
APPR: smarceau 2005/08/29

THIRD ANGLE PROJECTION | DRAWING: D-SIZE | SERIES: 33481

molex

MX150 1X4 BLADE
SEALED ASSEMBLY MAT SEAL

PRODUCT CUSTOMER DRAWING

DOCUMENT NUMBER	DOC TYPE	DOC PART	REVISION
SD-33481-041	PSD	001	W3

MATERIAL NUMBER | CUSTOMER: GENERAL MARKET | SHEET NUMBER: 2 OF 5

DOCUMENT STATUS	P1	RELEASE DATE	2020/09/21 14:03:58

TEMPLATE: creator-ltr-prod-D
DOCUMENT: ltr
DATE: 2018/01/18

BLADE SEALED ASSEMBLY

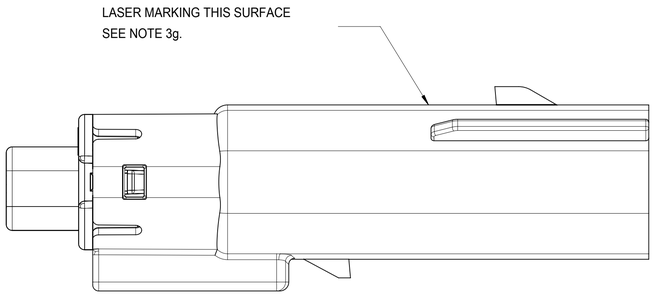

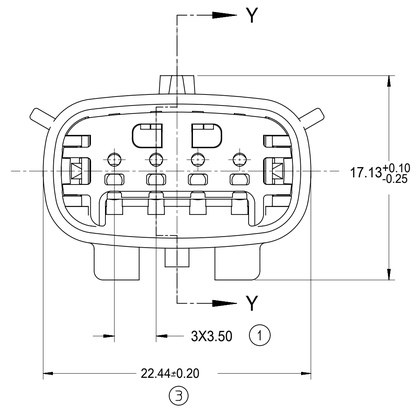

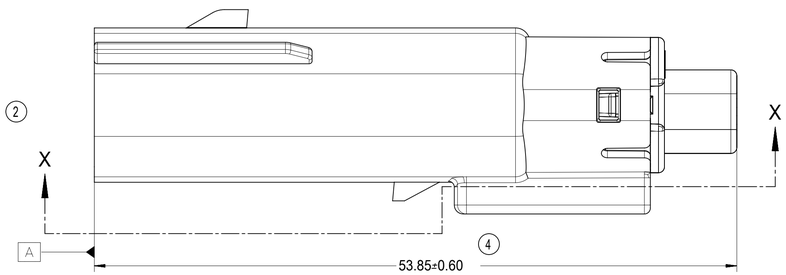

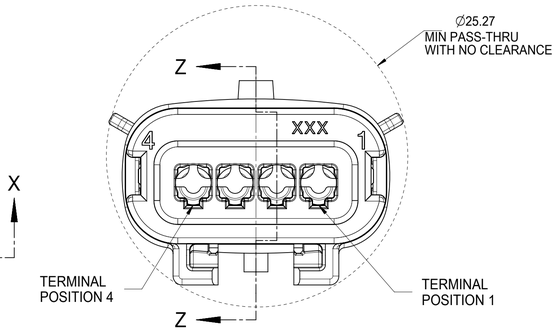

REAR VIEW
(WIRE HARNESS SIDE)

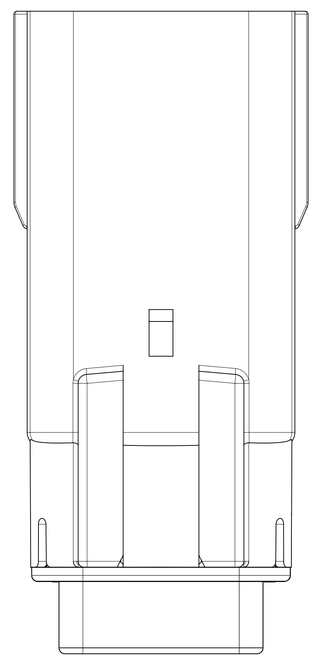

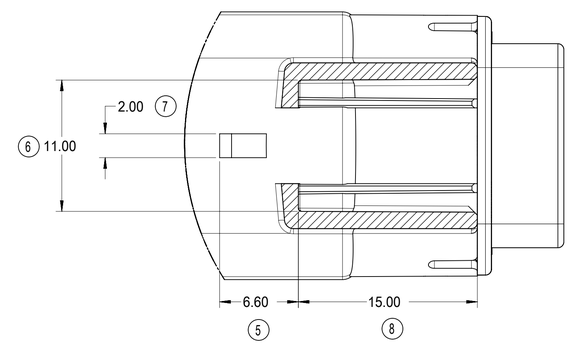

PARTIAL X-X
SCALE 4:1

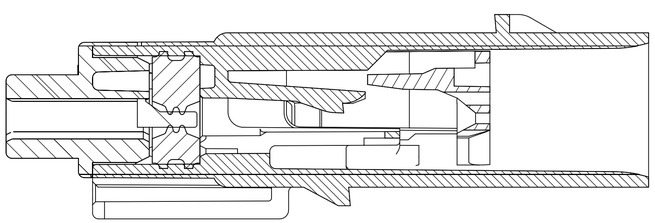

PRIMARY LOCK REINFORCEMENT (PLR) SHOWN
IN PRE-STAGED POSITION

SECTION Z-Z

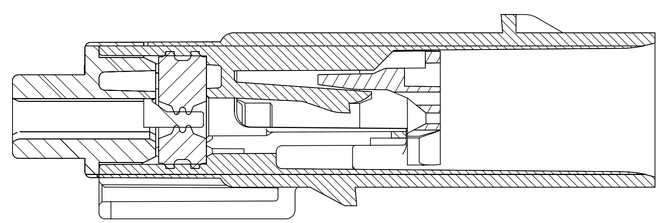

PRIMARY LOCK REINFORCEMENT (PLR) SHOWN
IN FINAL-LOCK POSITION

SECTION Y-Y

THIS DRAWING CONTAINS INFORMATION THAT IS PROPRIETARY TO MOLEX ELECTRONIC TECHNOLOGIES, LLC AND SHOULD NOT BE USED WITHOUT WRITTEN PERMISSION

DIMENSION UNITS	SCALE
mm	4:1

GENERAL TOLERANCES (UNLESS SPECIFIED)

ANGULAR TOL	±	3.0 °
4 PLACES	±	
3 PLACES	±	
2 PLACES	±	0.1
1 PLACE	±	0.3
0 PLACES	±	

DRAFT WHERE APPLICABLE MUST REMAIN WITHIN DIMENSIONS

CURRENT REV DESC: UPDATED PARTS STATUS

EC NO: 645317

DRWN:	MKP	2020/08/07
CHK'D:	MJMITCHELL	2020/09/21
APPR:	MJMITCHELL	2020/09/21

INITIAL REVISION:

DRWN:	DGRIFFITHS	2005/08/26
APPR:	smarceau	2005/08/29

THIRD ANGLE PROJECTION | DRAWING: D-SIZE | SERIES: 33481

molex

MX150 1X4 BLADE
SEALED ASSEMBLY MAT SEAL

PRODUCT CUSTOMER DRAWING

DOCUMENT NUMBER	DOC TYPE	DOC PART	REVISION
SD-33481-041	PSD	001	W3

MATERIAL NUMBER	CUSTOMER	SHEET NUMBER
	GENERAL MARKET	3 OF 5

DOCUMENT STATUS	P1	RELEASE DATE	2020/09/21 14:03:58

TEMPLATE: master-tb-prod-D
DRAWING: 33481
DATE: 2019-09-14

SYSTEM PACKAGING

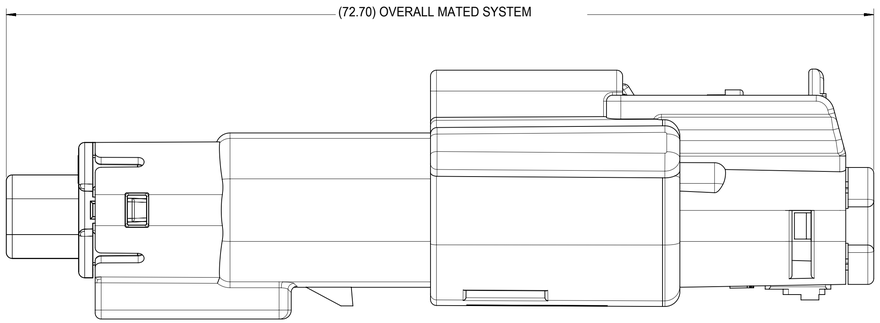

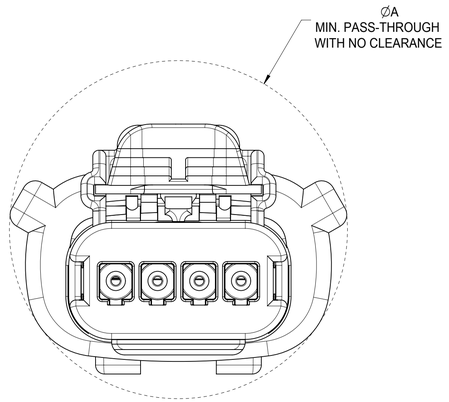

CHARTED DIMENSIONS

CONFIGURATION	A
MX150 1X4 RECPT SEALED ASSY - STANDARD	29.14
MX150 1X4 RECPT SEALED ASSY - ERGO	29.33
MX150 1X4 RECPT SEALED ASSY - SHORTING (SHRT) BAR	29.14

THIS DRAWING CONTAINS INFORMATION THAT IS PROPRIETARY TO MOLEX ELECTRONIC TECHNOLOGIES, LLC AND SHOULD NOT BE USED WITHOUT WRITTEN PERMISSION

DIMENSION UNITS	SCALE
mm	4:1

GENERAL TOLERANCES (UNLESS SPECIFIED)

ANGULAR TOL	±	3.0 °
4 PLACES	±	
3 PLACES	±	
2 PLACES	±	0.1
1 PLACE	±	0.3
0 PLACES	±	

DRAFT WHERE APPLICABLE MUST REMAIN WITHIN DIMENSIONS

CURRENT REV DESC: UPDATED PARTS STATUS

EC NO: 645317
DRWN: MKP 2020/08/07
CHK'D: MJMITCHELL 2020/09/21
APPR: MJMITCHELL 2020/09/21

INITIAL REVISION:
DRWN: DGRIFFITHS 2005/08/26
APPR: smarceau 2005/08/29

THIRD ANGLE PROJECTION | DRAWING: D-SIZE | SERIES: 33481

molex

MX150 1X4 BLADE
SEALED ASSEMBLY MAT SEAL

PRODUCT CUSTOMER DRAWING

DOCUMENT NUMBER	DOC TYPE	DOC PART	REVISION
SD-33481-041	PSD	001	W3

MATERIAL NUMBER | CUSTOMER: GENERAL MARKET | SHEET NUMBER: 4 OF 5

DOCUMENT STATUS	P1	RELEASE DATE	2020/09/21 14:03:58

W3

ASSEMBLY PART NUMBER	COLOR	KEYING OPTION	CAVITY TYPE & STATUS (X = PLUGGED) 1	2	3	4	STATUS	COMMENTS
33481-0401	BLACK	A					NOT RECOMMENDED	
33481-0402	LT. GRAY	B					NOT RECOMMENDED	
33481-0403	BROWN	C					NOT RECOMMENDED	NOT RECOMMENDED, SEE P/N 33481-0424
33481-0404	GREEN	D					NOT RECOMMENDED	NOT RECOMMENDED, SEE P/N 33481-0425
33481-0405	BLACK	C					PLANNED OBSOLESCENCE	
33481-0406	BLACK	A				X	NOT RECOMMENDED	
33481-0407	LT. GRAY	B				X	PLANNED OBSOLESCENCE	
33481-0408	BROWN	C				X	PLANNED OBSOLESCENCE	
33481-0409	GREEN	D				X	PLANNED OBSOLESCENCE	
33481-0410	CUSTOM	TBD				X	PLANNED OBSOLESCENCE	
33481-0411	BLACK	A	X			X	NOT RECOMMENDED	
33481-0412	LT. GRAY	B	X			X	PLANNED OBSOLESCENCE	
33481-0413	BROWN	C	X			X	PLANNED OBSOLESCENCE	
33481-0414	GREEN	D	X			X	PLANNED OBSOLESCENCE	
33481-0415	CUSTOM	TBD	X			X	PLANNED OBSOLESCENCE	
33481-0416	BLACK	A	X	X	X	X	NOT RECOMMENDED	
33481-0417	LT. GRAY	B	X	X	X	X	PLANNED OBSOLESCENCE	
33481-0418	BROWN	C	X	X	X	X	NOT RECOMMENDED	NOT RECOMMENDED, SEE P/N 33481-0426
33481-0419	GREEN	D	X	X	X	X	NOT RECOMMENDED	NOT RECOMMENDED, SEE P/N 33481-0427
33481-0420	CUSTOM	TBD	X	X	X	X	PLANNED OBSOLESCENCE	
33481-0421	BLACK	A			X		NOT RECOMMENDED	
33481-0422	BLACK	A			X	X	NOT RECOMMENDED	
33481-0423	LT. GRAY	B	X	X			NOT RECOMMENDED	
33481-0424	DK. GRAY	C					PLANNED OBSOLESCENCE	
33481-0425	ST. GRAY	D					PLANNED OBSOLESCENCE	
33481-0426	DK. GRAY	C	X	X	X	X	PLANNED OBSOLESCENCE	
33481-0427	ST. GRAY	D	X	X	X	X	PLANNED OBSOLESCENCE	
33481-0428	YELLOW	A					PLANNED OBSOLESCENCE	
33481-0429	LT. GRAY	B		X	X		NOT RECOMMENDED	
33481-0430	BLACK	A	X		X		NOT RECOMMENDED	

ASSEMBLY PART NUMBER	COLOR	KEYING OPTION	CAVITY TYPE & STATUS (X = PLUGGED) 1	2	3	4	STATUS	COMMENTS
33481-4401	BLACK	A						
33481-4402	LT. GRAY	B						
33481-4403	BROWN	C						NOT RECOMMENDED, SEE P/N 33481-4424
33481-4404	GREEN	D						NOT RECOMMENDED, SEE P/N 33481-4425
33481-4405	BLACK	C						
33481-4406	BLACK	A				X		
33481-4407	LT. GRAY	B				X		
33481-4408	BROWN	C				X		
33481-4409	GREEN	D				X		
33481-4410	CUSTOM	TBD				X		
33481-4411	BLACK	A	X			X		
33481-4412	LT. GRAY	B	X			X		
33481-4413	BROWN	C	X			X		
33481-4414	GREEN	D	X			X		
33481-4415	CUSTOM	TBD	X			X		
33481-4416	BLACK	A	X	X	X	X		
33481-4417	LT. GRAY	B	X	X	X	X		
33481-4418	BROWN	C	X	X	X	X		NOT RECOMMENDED, SEE P/N 33481-4426
33481-4419	GREEN	D	X	X	X	X		NOT RECOMMENDED, SEE P/N 33481-4427
33481-4420	CUSTOM	TBD	X	X	X	X		
33481-4421	BLACK	A			X			
33481-4422	BLACK	A			X	X		
33481-4423	LT. GRAY	B	X	X				
33481-4424	DK. GRAY	C						
33481-4425	ST. GRAY	D						
33481-4426	DK. GRAY	C	X	X	X	X		
33481-4427	ST. GRAY	D	X	X	X	X		
33481-4428	YELLOW	A						
33481-4429	LT. GRAY	B		X	X			
33481-4430	BLACK	A	X		X			

THIS DRAWING CONTAINS INFORMATION THAT IS PROPRIETARY TO MOLEX ELECTRONIC TECHNOLOGIES, LLC AND SHOULD NOT BE USED WITHOUT WRITTEN PERMISSION

DIMENSION UNITS	SCALE
mm	1:1

GENERAL TOLERANCES (UNLESS SPECIFIED)

ANGULAR TOL	±	3.0 °
4 PLACES	±	
3 PLACES	±	
2 PLACES	±	0.1
1 PLACE	±	0.3
0 PLACES	±	

DRAFT WHERE APPLICABLE MUST REMAIN WITHIN DIMENSIONS

CURRENT REV DESC: UPDATED PARTS STATUS

EC NO: 645317
DRWN: MKP 2020/08/07
CHK'D: MJMITCHELL 2020/09/21
APPR: MJMITCHELL 2020/09/21

INITIAL REVISION:
DRWN: DGRIFFITHS 2005/08/26
APPR: smarceau 2005/08/29

THIRD ANGLE PROJECTION | DRAWING: D-SIZE | SERIES: 33481

molex

MX150 1X4 BLADE
SEALED ASSEMBLY MAT SEAL

PRODUCT CUSTOMER DRAWING

DOCUMENT NUMBER	DOC TYPE	DOC PART	REVISION
SD-33481-041	PSD	001	W3

MATERIAL NUMBER | CUSTOMER: GENERAL MARKET | SHEET NUMBER: 5 OF 5

DOCUMENT STATUS	P1	RELEASE DATE	2020/09/21 14:03:58

Template Version: 10-prod-C
REPORT: 10
DATE: 2018-01-18